134309

United States General Accounting Office

GAO

Briefing Report to the Chairman, Committee on Science, Space, and Technology, House of Representatives

October 1987

SPACE SHUTTLE ACCIDENT

NASA's Actions to Address the Presidential Commission Report

134309

040422

GAO/NSIAD-88-30BR

GAO

United States
General Accounting Office
Washington, D.C. 20548

National Security and
International Affairs Division

B-229005

October 30, 1987

The Honorable Robert A. Roe
Chairman, Committee on Science,
Space, and Technology
House of Representatives

Dear Mr. Chairman:

On July 15, 1987, we briefed representatives of the Subcommittee on Space Science and Applications, the requester, on our review of National Aeronautics and Space Administration (NASA) actions to address the recommendations presented in the Report of the Presidential Commission on the Space Shuttle Challenger Accident, dated June 6, 1986. As you requested, this report presents the information contained in the briefing as well as the results of additional audit work performed.

We identified 39 specific recommendations within the 9 categories of recommendations presented in the Presidential Commission report. NASA has taken or is taking actions to address the intent of all of them. NASA's specific actions to address the Commission's intent differ from the exact language in the Commission's report for six of the recommendations.

-- The Commission recommended that NASA establish a Space Transportation System Safety Advisory Panel that reports to the Shuttle Program Manager. NASA established the panel; however, it reports to the Associate Administrator for Safety, Reliability, Maintainability, and Quality Assurance instead of the Shuttle Program Manager. NASA officials stated that reporting to the Associate Administrator increases the Safety Panel's independence and it can be responsive to space station issues as well as shuttle issues.

-- The Commission recommended that the Safety Advisory Panel include representation from NASA's safety organization, mission operations, and the astronaut office. The panel, as officially established in January 1987, does not include a representative from the safety organization.

However, a member of the safety office has been serving in an ad hoc capacity until the official NASA Management Instruction for the panel is revised to make the safety office representative an official member.

-- The Commission recommended that NASA determine the conditions under which planned landings at the Kennedy Space Center would be acceptable. Furthermore, the Commission stated that criteria for tires, brakes, and the nosewheel steering system should be established. To date, NASA has not determined conditions or criteria for landings at Kennedy nor has it established criteria for the tires, brakes, and nosewheel steering system. NASA stated that regular end-of-mission landings will occur at Edwards Air Force Base for the first 2 years after flights resume. During that time, NASA will continue its program of improvements and tests of the tires, brakes, and nosewheel steering system and will also gain the confidence officials say is needed before returning to the Kennedy Space Center for landings. NASA officials also said that information developed on the tires, brakes, and nosewheel steering system during the Edwards landings will be used to establish the requisite criteria for landings at Kennedy.

-- The Commission recommended that maintenance procedures for those items whose failure could cause loss of the orbiter and crew be specified in the Critical Items List. NASA officials stated that it will not specify these procedures in the Critical Items List. NASA officials stated that the closed-loop accounting system it is establishing within the System Integrity Assurance Program eliminates the need for procedures in the Critical Items List. NASA officials stated that the accounting system will track these specific critical items to determine if the maintenance procedures have been successfully accomplished. Also, these critical items will now be annotated in the books that contain the step-by-step operations and maintenance instructions.

-- The Commission recommended that the practice of waiving periodic orbiter structural inspections be stopped. NASA officials stated that these inspections can still be waived; however the inspection requirements have been restructured, and a new tracking system has been established to report inspections that have been waived. Under this system, management would be made aware of waived inspections.

-- The Commission recommended that NASA stop the practice of removing parts from one orbiter to supply another. NASA officials stated that this cannibalization will not be eliminated; however, actions relating to spare parts and logistics have been initiated to alleviate the need for routine removal of parts. In addition, the removal of components from one orbiter for installation in another must now be approved by a NASA Headquarters-chaired board. NASA officials also stated that the closed-loop accounting system it is establishing will track and report on cannibalization.

NASA has performed extensive work since January 1986 to return the shuttle to safe flight. In many cases, NASA has exceeded the specific recommendations in the Presidential Commission report in order to address related issues and/or problem areas. For example, NASA has established a safety reporting system to provide the capability for NASA and contractor personnel to confidentially notify the NASA Safety, Reliability, Maintainability and Quality Assurance Office of problems that could result in loss of life or mission capability, injury, or property damage. In appendix II, we discuss each of the 39 specific recommendations and identify many of the actions NASA is taking on them as well as on related matters. Several of the 39 specific recommendations require actions that will not or cannot be completed until flights are resumed. We note these throughout the appendix.

We developed the information in this report through an examination of NASA documents and discussions with NASA officials at NASA Headquarters, the Kennedy and Johnson Space Centers, and the Marshall Space Flight Center. We also met with officials from the National Research Council, which was charged with certain responsibilities by the Presidential Commission, and the Aerospace Safety Advisory Panel, which is a senior advisory committee to NASA and the Congress.

We discussed a draft of this report with NASA officials and incorporated their views and comments in the report. In general, NASA officials said that they found the report to be accurate and complete. Their comments were primarily of a technical nature and included updates where changes had occurred since our audit work was completed. Our work was performed in accordance with generally accepted government auditing standards.

We are sending copies of this briefing report to the Chairmen, House and Senate Committees on Appropriations and the Senate Committee on Commerce, Science, and Transportation; the Administrator, National Aeronautics and Space Administration; and other interested parties upon request.

Should you have any additional questions, please contact me at 275-4268.

Sincerely yours,

Harry R. Finley
Senior Associate Director

Contents

		Page
LETTER		1
APPENDIX		
I	BACKGROUND	7
	Solid Rocket Booster	7
	Failure Modes and Effects Analysis, Critical Items List, and Hazard Analysis	8
II	NASA'S ACTIONS TO ADDRESS THE RECOMMENDATIONS IN THE PRESIDENTIAL COMMISSION REPORT	10
	Category I--Redesign of Solid Rocket Motor Joint and Independent Review	10
	Categories II and V--Shuttle Management Structure, Astronauts in Management, A Shuttle Safety Panel, and Improved Communications4	14
	Category III--Criticality Review and Hazard Analysis	19
	Category IV--Safety Organization	21
	Category VI--Landing Safety	24
	Category VII--Launch Abort and Crew Escape	30
	Category VIII--Flight Rate Projections	34
	Category IX--Maintenance Safeguards	36
III	PRESENT AND FORMER ASTRONAUTS IN MANAGEMENT POSITIONS AS OF JUNE 30, 1987	41
TABLES		
II.1	NASA-Wide SRM&QA Staffing	23
II.2	NASA-Wide SRM&QA Funding	23
II.3	Weather Forecasting Capability Improvements	28
II.4	NASA's Projected Flight Rate	35

FIGURES

		Page
II.1	Field Joint	11
II.2	Side Hatch Rocket Powered Extraction System	31
II.3	Pole Escape Concept	32
II.4	Split-S Maneuver in the Case of Three Main Engines Failing at Lift-off	33

ABBREVIATIONS

CIL	Critical Items List
FMEA	Failure Modes and Effects Analysis
FRR	Flight Readiness Review
GAO	General Accounting Office
HA	Hazard Analysis
JSC	Johnson Space Center
KSC	Kennedy Space Center
MMT	Mission Management Team
MSFC	Marshall Space Flight Center
NASA	National Aeronautics and Space Administration
NRC	National Research Council
NSTS	National Space Transportation System
PCASS	Program Compliance Assurance and Status System
PRACA	Problem Reporting and Corrective Action
SIAP	System Integrity Assurance Program
SR&QA	Safety, Reliability and Quality Assurance
SRM&QA	Safety, Reliability, Maintainability, and Quality Assurance

BACKGROUND

On January 28, 1986, the Space Shuttle Challenger (Mission 51-L) was destroyed shortly after lift-off from the Kennedy Space Center (KSC). A Presidential Commission on the Space Shuttle Challenger accident was sworn in on February 6, 1986, under the chairmanship of William P. Rogers. The Commission report, dated June 6, 1986, stated that the cause of the accident was a failure in the joint between the two lower segments of the right solid rocket motor. The specific failure was the destruction of the seals that are intended to prevent hot gases from leaking through the joint during the propellant burn of the rocket motor.

In addition to the mandated Presidential Commission study, the Associate Administrator for Space Flight initiated a review, in March 1986, of the overall management structure of the space shuttle program. Further, in June 1986, NASA established a National Space Transportation System (NSTS) Management and Communications Study Team to assess the NSTS program operation and organization in order to be able to address recommendations in the Commission report. This assessment, completed in August 1986, was followed by an implementation decision in November 1986 by the Associate Administrator for Space Flight. The implementation decision defined the direction for the organization and operation of the NSTS program.

In May 1986, the NASA Administrator requested Lieutenant General Samuel C. Phillips (U.S. Air Force, retired) to review the overall NASA management structure and to recommend changes necessary to improve the management of its programs and people. This study, completed in December 1986, recommended that NASA establish centralized headquarters responsibility for all programs and restructure the agency to improve the lines of communication. The study contained a number of specific recommendations for NASA management.

NASA has testified and issued two status reports on its actions to address the recommendations contained in the Presidential Commission report. The more recent report, dated June 30, 1987, represents NASA's fulfillment of a commitment made to the President in July 1986 to issue a status report 1 year after the Presidential Commission report.

SOLID ROCKET BOOSTER

As reported in the Presidential Commission report, the cause of the accident was a failure in the solid rocket motor, which is a major subassembly of the solid rocket booster. The other major

subassemblies are the forward assembly (forward skirt and nose cone) and the aft skirt. Each solid rocket motor case is made of 11 individual cylindrical weld-free steel sections about 12 feet in diameter. When assembled, they form a tube almost 116 feet long. The 11 sections of the motor case are joined by tang-and-clevis joints held together by 180 steel pins around the circumference of each joint. The 11 sections are partially assembled at the factory into 4 segments, which are shipped in separate pieces to KSC. These four segments are the parts of the motor case into which the propellant is poured. The motor case joints in these pre-shipment assemblies are known as factory joints.

At KSC, the four segments received from the factory are assembled to form the solid rocket motor. Joints between the four factory segments are called field joints. Joint sealing in these field joints is provided by two rubber O-rings with diameters of 0.280 inches. Figure II.1 in appendix II shows the field joint used on the shuttle at the time of the accident.

FAILURE MODES AND EFFECTS ANALYSIS, CRITICAL ITEMS LIST, AND HAZARD ANALYSIS

Three integral parts of NASA's effort to return to safe flight and to identify those aspects of the program needing changes are the Failure Modes and Effects Analysis (FMEA), Critical Items List (CIL), and Hazard Analysis (HA). NASA regulations require that a FMEA/CIL/HA be developed for each project element[1] of the Space Transportation System in an effort to identify systems or components which, if they fail, could present a risk to the safety of the crew or could result in loss of the vehicle or mission.

The FMEA is a systematic analysis performed on each component of the shuttle system to identify hardware items that are critical to the performance and safety of the vehicle and mission. The analysis includes identifying all system components, determining the potential modes of failure for each component, and recommending corrective actions. Under the FMEA methodology, each hardware item is assigned a functional criticality number according to the potential "worst case" effect of a failure. Criticality 1 signifies that a single failure could result in loss of life or vehicle. Criticality 2 signifies that a single failure could

---

[1]The project elements of the Space Transportation System are the orbiter, main engines, external tank, solid rocket boosters, and launch and landing facilities and operations. According to NASA's June 30, 1987, report, the Flight Crew Operations Directorate and the Mission Operations Directorate are also now project elements.

result in loss of mission. Criticality 3 is all others. Criticality 1 and 2 items have an additional designator for redundancy--1R means that the hardware has a redundant item(s) and that a failure of all of them could cause loss of life or vehicle; 2R means that failure of all redundant hardware item(s) could cause loss of mission.

The FMEA leads to the CIL, which lists those components that if they failed could cause the loss of vehicle, life, or mission. FMEA and CIL items contain the same information, but the CIL includes the retention rationale and the FMEA may include the corrective actions. The retention rationale identifies the justification for retaining a critical item that does not meet design specifications for redundancy. The rationale should contain information regarding the (1) design, (2) tests accomplished to assure integrity of hardware, (3) specific inspection points, (4) failure history, and (5) operational means to mitigate the hardware's failure.

According to a program official, as the FMEA/CIL is completed for each shuttle project element, a waiver request for all items that do not meet specified design requirements will be submitted to a Program Requirements Change Board for review and action.

The HA determines potential sources of danger that could develop while operating and maintaining the system hardware and software. The HA also identifies the presence of other potential risks caused by the environment, crew-machine interfaces, and mission activities. Through the HA, officials recommend solutions for those conditions that could cause loss of life, loss of system, or injury to the public. The HA identifies the hazards and the status of resolution, and categorizes the hazards as controlled or as accepted risks. The HA is done after the FMEA/CIL.

NASA'S ACTIONS TO ADDRESS THE RECOMMENDATIONS IN THE PRESIDENTIAL COMMISSION REPORT

From the 9 broad categories of recommendations contained in the Presidential Commission report, we identified 39 specific recommendations requiring NASA action. The following sections present the status of NASA's actions on the 39 recommendations by category.

CATEGORY I--REDESIGN OF SOLID ROCKET MOTOR JOINT AND INDEPENDENT REVIEW

Category I included the following specific recommendations:

-- The faulty solid rocket motor joint and seal must be changed.

-- Design options should not be prematurely precluded because of schedule, cost, or reliance on existing hardware.

-- The solid rocket motor joints should be tested and certified, and full consideration should be given to conducting tests of the exact flight configuration in a vertical position. This recommendation included a number of specific requirements that the joints should satisfy, which would be demonstrated through the testing program.

-- The Administrator of NASA should request the National Research Council (NRC) to form an independent solid rocket motor design oversight committee.

Solid rocket motor change

A Redesign Team was assembled at the Marshall Space Flight Center (MSFC) to review the probable causes of the joint failure and to lead the redesign effort. According to an MSFC official, the team looked into a number of changes to be made to the solid rocket motor before the next flight as well as changes for subsequent flights. The first changes involve the field joint, factory joint insulation, nozzle-to-case joint, nozzle, and ignition system.

NASA and the solid rocket motor contractor have redesigned the field joint to include the following:

-- a capture feature to minimize joint rotation,

-- a third O-ring seal,

-- heaters to maintain seal temperature at 75 degrees Fahrenheit or above,

-- a weather seal to prevent water entry into the joint and possible freeze-up,

-- longer pins and new retention bands, and

-- an alternative insulation seal ("J-seal") to eliminate the putty previously used.

Figure II.1 shows the field joint at the time of the 51-L accident and the same joint following the design changes.

Figure II.1: Field Joint

51-L Joint

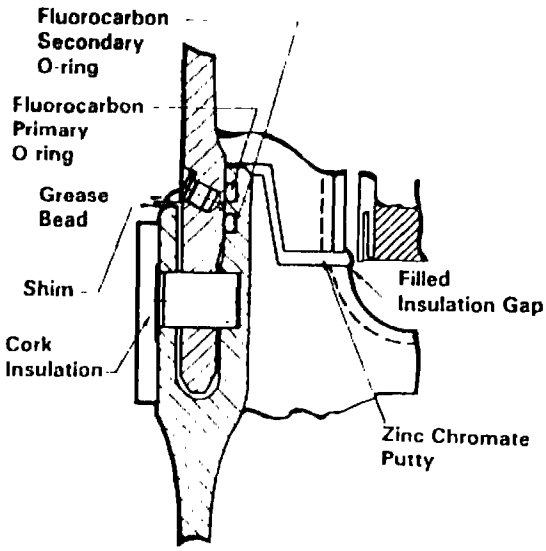

Redesigned Joint

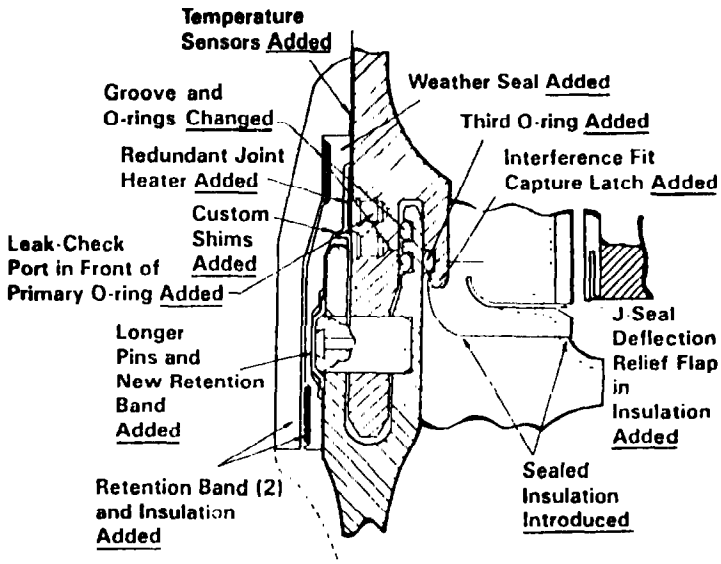

Source: NASA

No premature preclusions of design options

A June 25, 1986, directive from the Associate Administrator for Space Flight to the Manager of the NSTS Office outlined the following objectives relative to the redesign of the solid rocket motor joint and consideration of alternative designs:

-- "The primary objective . . . is to provide a verified Solid Rocket Motor with field and nozzle joints that is safe to fly."

-- "A secondary objective should be to minimize the schedule impact by using existing hardware, if this can be done without compromising safety."

-- "To insure adequate program contingency . . . also develop, through concept definition, a totally new design that is not reliant on existing hardware."

In February 1987 reports to the Senate Committee on Commerce, Science, and Transportation and the House Committee on Science, Space and Technology, NASA said that parallel with the redesign effort, it had initiated contracts to solicit concepts for field joint redesign and for a second-generation solid rocket motor design. The reports further stated that responses were being reviewed by NASA.

Officials from both the Aerospace Safety Advisory Panel[2] and the NRC[3] have stated that they believe NASA relied heavily on the present solid rocket booster inventory in its efforts to avoid delaying the return to flight. NRC added that "the design had been constrained by a reluctance to venture too far from prior experiences," and, therefore, "some valid design options, though considered, have not been given serious development effort." In a letter to the NASA Administrator, the Chairman of the NRC Redesign Panel stated that an alternative joint design program should be developed for at least one completely different joint design, both for the next-generation booster and as a precautionary measure in case the modified joint does not meet performance and safety specifications.

According to NASA officials, NASA is working on alternative design features with the current solid rocket booster contractor, in case

---

[2]The Aerospace Safety Advisory Panel was established in the aftermath of the Apollo Command and Service Module spacecraft fire January 27, 1967, at Kennedy Space Center. Shortly thereafter, the Congress enacted legislation that established the panel as a senior advisory committee to NASA and to the Congress.

[3]The National Research Council is the principal operating agency of the National Academy of Sciences and the National Academy of Engineering to serve government and other organizations.

the current design with the capture feature joint does not pass its tests. The alternative design features are backup implementations with longer lead-times, higher costs, and schedule impacts.

Testing and certification with consideration for vertical testing

NASA is conducting a test program for the solid rocket booster. In order to better understand the 51-L accident and the booster, NASA tested the 51-L joint configuration. According to NASA officials, NASA is conducting a more extensive testing program of both the old and new joints than it did on the old joint prior to the first shuttle flight in order to better understand the operation and dynamics of the entire solid rocket motor. The first of two development motor firing tests occurred on August 30, 1987. Although complete test results will not be known until late 1987, NASA officials were encouraged by the apparent success of this critical test. Tests of the new joint and solid rocket motor are scheduled to continue through mid-1988. According to NASA officials, additional production verification motor tests will be conducted.

In addressing the issue of giving full consideration to vertical testing, MSFC directed several independent test attitude assessments. Based on the conclusions of these assessments, NASA decided to conduct the test in a horizontal mode. NASA's decision was endorsed by the Aerospace Safety Advisory Panel and the NRC.

Independent review of the solid rocket motor redesign

NASA requested that NRC independently review and evaluate NASA's redesign work relating to the solid rocket booster. NRC established a panel in early June 1986 and has issued four letters to the NASA Administrator outlining its findings, concerns, conclusions, and recommendations. The NRC panel reported that the new case field joint design selected by NASA appears to have eliminated the basic weaknesses of the earlier design.

Other NASA work

NASA has undertaken two projects on hardware items related to the solid rocket motor that it expects to complete before flights resume. These projects affect the solid rocket booster's external tank attach ring and the aft skirt.

The attach ring connects or holds the booster to the external tank. According to an MSFC official, a number of fastener failures

occurred during the first 23 flights (26 of the 46 recovered boosters, or about 57 percent, had failures). The contractor has redesigned the attach ring to completely, rather than partially, encircle the booster in order to better distribute the loads and stresses.

The aft skirt supports the entire booster and attaches to the launch pad. A crack along the aft skirt occurred during a full-scale structural test. Although an MSFC official said that the failure was at higher test loads than the skirt is subjected to in actual operational conditions, NASA is strengthening the skirt.

Officials of the Shuttle Program Office at Johnson Space Center (JSC), have also undertaken a Design Requirements Review at the direction of the Associate Administrator for Space Flight. In this review, NASA staff is reexamining the fundamental system requirements, revalidating specifications, and ensuring compliance. The review is examining all subsystems of the shuttle elements.

CATEGORIES II AND V--SHUTTLE MANAGEMENT STRUCTURE, ASTRONAUTS IN MANAGEMENT, A SHUTTLE SAFETY PANEL, AND IMPROVED COMMUNICATIONS

Because the subjects involved in the areas of shuttle management, astronauts in management, a shuttle safety panel, and program communications are closely related, NASA consolidated them in developing actions to respond to the Commission's report. We therefore analyzed these recommendations as a single unit. Categories II and V included the following specific recommendations:

-- The shuttle program structure should be reviewed.

-- The Program Manager's role should be redefined.

-- The Program Manager should be given funding authority.

-- NASA should encourage the transition of qualified astronauts into agency management positions.

-- The function of the Flight Crew Operations Director should be elevated in the NASA organization structure.

-- NASA should establish an NSTS Safety Advisory Panel reporting to the NSTS Program Manager.

-- The Panel's charter should specify its responsibilities.

-- The Panel should include representation from the safety organization, mission operations, and the astronaut office.

-- NASA should improve communications at Marshall Space Flight Center to eliminate management isolation.

-- A policy should be developed to govern the imposition and removal of shuttle launch constraints.

-- Flight Readiness Reviews and Mission Management Team meetings should be recorded.

-- The Flight Crew Commander, or a designated representative, should attend the Flight Readiness Review, participate in acceptance of the vehicle for flight, and certify that the crew is properly prepared for flight.

Shuttle program structure, Program Manager's role, and funding authority

Prior to the 51-L accident, the NSTS Program Manager was located at JSC and had responsibility for all aspects of the NSTS program, except the budget.

In response to the recommendations for a review of NASA's management structure and redefinition of the Program Manager's responsibilities, NASA switched from the "lead center" concept--under which the shuttle program was primarily managed by JSC--to centralized management of the shuttle program at NASA Headquarters. The position of Director, NSTS, was reestablished, and the NSTS Program Manager was named to the position. The centralization was consistent with the recommendations of the internal review study conducted by General Phillips.

The Director has been given full responsibility and authority for the operation and conduct of the NSTS program, including the budget. He reports to the Associate Administrator for Space Flight. In addition, two deputy directors have been appointed, who report to the NSTS Director.

The Deputy Director for Program, located at JSC, is responsible for daily program management and execution. His responsibilities include detailed program planning, direction, scheduling, configuration management, and system engineering and integration for the shuttle vehicle, ground facilities, and payloads.

The Deputy Director for Operations, located at KSC, is responsible for all operational aspects of the space shuttle mission including

final vehicle preparation, mission execution, and return of the vehicle for next flight processing. The Deputy Director for Operations will present the Flight Readiness Review (FRR), manage the final launch decision process, and chair the Mission Management Team (MMT).

The Manager, Shuttle Projects Office, continues to be located at the MSFC, but now reports directly to the Deputy Director for Program. Previously, the Manager was primarily responsible to the MSFC Director and secondarily to the NSTS Program Manager at JSC.

Astronauts in management

On May 11, 1987, the Associate Administrator for Space Flight issued a memorandum requesting that the Director of JSC continue the past policy of rotating astronauts through various support positions to provide astronaut representation in programmatic decisions and to evaluate their management potential. The memorandum stated that these actions should allow the agency to take advantage of a large pool of experienced astronauts as future managers with the agency. NASA had 16 present or former astronauts in management positions as of June 30, 1987. (See app. III for list of the astronauts in management positions.)

Elevation of Flight Crew Operations Director's position

Following the appointment of a new JSC Center Director in October 1986, the JSC organizational structure was modified. As part of the reorganization, the Director of Flight Crew Operations Division reports to the Center Director. From 1982 to 1986, the Flight Crew Operations Director reported to the Director of Space Operations, who reported to the Center Director.

Space Flight Safety Panel

NASA established a Space Flight Safety Panel in September 1986 to monitor all manned space program activities. In a change from the Commission recommendation, which stated that the panel should report to the Shuttle Program Manager, NASA decided to have the panel report to the Associate Administrator for Safety, Reliability, Maintainability, and Quality Assurance (SRM&QA). According to the NSTS Deputy Director for Operations, the panel will be responsive to space station issues as well as shuttle issues. In addition, NASA officials said that reporting to the Associate Administrator increases the Safety Panel's independence.

The panel is to promote a Space Flight Safety Program that will preserve human and material resources to enhance efficient space flight operations. It is also intended to provide an independent communications link between SRM&QA and the Associate Administrators for manned space programs for matters pertaining to space flight safety.

An astronaut with flight experience chairs the panel. Other panel members include a JSC Flight Director, a MSFC Mission Manager, and a KSC Test Director. According to the Chief, Operational Safety Branch, he has been selected as an SRM&QA representative on the panel, but he is serving in an ad hoc capacity until the NASA Management Instruction is revised to make him an official member. This SRM&QA representative is an example of NASA meeting the intent of a Commission recommendation although not currently meeting the exact language. Membership on the panel will rotate with each member serving a 2-year term.

Improved communications

The NSTS Deputy Director for Operations told us that communications have been enhanced by NASA's reorganizations and, in particular, by the new NSTS management structure. In addition, the Deputy Director believes that the new programmatic chain clarifies the lines of communications, provides checks and balances through the NSTS Director, and ensures that problems are elevated to the correct level for consideration and decisions.

Additionally, NASA officials said that communication among the centers is expected to improve with revitalization of the Office of Space Flight Management Council. The Management Council meets on a monthly basis to review and discuss program progress, major decisions, and issues and to provide the Associate Administrator for Space Flight an independent assessment of program status. Council members are the Associate Administrator for Space Flight and the Directors for JSC, KSC, MSFC, and the National Space Technology Laboratory.

In commenting on a draft of this report, NASA officials said that the monthly Program Director Management Review is a new communication tool. At these meetings, the Shuttle Program Director meets with the project managers and, periodically, with the major contractors.

Policy governing the imposition and removal of shuttle launch constraints

The Presidential Commission report stated that a launch constraint arises from a flight safety issue of sufficient seriousness to justify a decision not to launch. According to the Deputy Director for Operations, before the 51-L accident, launch constraints could be imposed and lifted by the project element managers.

According to the Deputy Director for Operations, in order to strengthen the process, launch constraints will now be managed under the System Integrity Assurance Program (SIAP). Through SIAP, program officials will identify and impose launch constraints, using a centralized, program-wide Problem Reporting and Corrective Action system. The Deputy Director said that launch constraints may be recommended and established by SRM&QA officials, as well as project managers, based on hardware analyses. In another strengthening action, he added that the Shuttle Program Director is now the sole authority for waiving launch constraints relating to Criticality 1 and 1R hardware and the Shuttle Program Deputy Directors have authority for waiving launch constraints relating to Criticality 2 and 2R hardware. He stated that launch constraints will be reviewed at the FRR for each shuttle launch.

Recording of Flight Readiness Reviews and Mission Management Team meetings

According to NASA's June 1987 report, the FRR and MMT proceedings will be recorded and formal minutes will be published. NASA officials added that the proceedings will be recorded on videotape. NASA officials told us that they are revising and rewriting the directives addressing the FRR and MMT, and the directives will be finalized in the fall of 1987.

Attendance by the Flight Crew Commander or designee at Flight Readiness Reviews

According to NASA's June 1987 report, the Flight Crew Commander or his designee will participate in the FRR. An official in the Office of Space Flight told us that, in addition, the Director, Flight Crew Operations (the Commander's supervisor), will be a participant in the FRR and will certify the preparedness of the flight crew for flight. He added that the FRR directive is being rewritten and will reflect this decision.

CATEGORY III--CRITICALITY REVIEW AND HAZARD ANALYSIS

Category III included the following specific recommendations:

- -- NASA and the primary shuttle contractors should review all Criticality 1, 1R, 2, and 2R items and hazard analyses.
- -- NASA should identify those items that must be improved prior to the return to flight.
- -- NRC should appoint an audit panel to verify the adequacy of the effort and report to the Administrator of NASA.

Review all Criticality 1, 1R, 2, and 2R items and hazard analyses

On March 13, 1986, the Shuttle Program Manager directed each element project office to conduct a review of its FMEA/CIL to affirm the completeness and accuracy of the current shuttle design. Further directives required the following actions:

- -- Review all Criticality 1 and 1R items in a complete reapproval process. Items that cannot be revalidated must be redesigned, certified, and qualified for flight.
- -- Review Criticality 2 and 3 CILs for reacceptance and proper categorization.
- -- Reverify, reassign, and resubmit all Criticality 1, 1R, 2, 2R, and 1S (Criticality 1 item relating to ground operations safety) waivers for approval.
- -- Reevaluate NSTS hazard analyses and hazard reports to affirm the completeness and accuracy of safety analyses pertaining to the current shuttle design and operations.

Proposed design changes before the next flight

According to the NSTS Deputy Manager, several design changes have been recommended as either a direct or indirect result of the FMEA/CIL reviews.

Orbiter

The FMEA/CIL review identified approximately 30 systems changes that are required before flights resume and others that are necessary to increase systems performance. Some of the changes are as follows:

-- a positive latch-open design feature for the main propulsion system disconnect valves between the orbiter and the external tank,

-- changes to enhance the orbiter landing gear and brakes (see Category VI--Landing Safety, p. 24),

-- changes to the orbiter thermal protection system,

-- addition of an alternate path for removal of water generated by the fuel cells,

-- changes in the orbiter flight software to provide additional performance margin and redundancy and to enhance safe space shuttle vehicle operation, and

-- an inflatable egress slide in the crew hatch area to facilitate crew egress from the orbiter on landing if rapid, unassisted departure from the vehicle is required.

Space shuttle main engines

NASA is implementing changes to increase the operating life, safety, reliability, and quality of the main engines. The primary objective of these changes is to expand the operating margins in areas such as temperature, pressure, and operating time. This effort incorporates an engine test program to certify hardware improvements for operation at power levels up to 104 percent of rated power for the earlier flights. Subsequent engine improvements and testing are planned to expand this capability to 109 percent of rated power. NASA will not operate the engines at the 109 percent power level except for emergency situations until the operating margins of the engines are better demonstrated.

Independent audit by the NRC

The NASA Administrator requested NRC to audit NASA's efforts regarding criticality review and hazard analysis. NRC formed a Shuttle Criticality Review and Hazard Analysis Audit Committee on

September 22, 1986. According to an NRC official, the audit is expected to be completed in late fall 1987.

The Committee issued an interim progress report on January 13, 1987, which stated that the Committee was favorably impressed by NASA's dedicated review effort and extremely beneficial results obtained thus far from the FMEA/CIL review. The interim report listed several areas for improvement. The NSTS Deputy Manager stated that NASA has taken actions to address the NRC suggestions. For example, the NSTS Program Office established a CIL Prioritization Team, which developed a methodology for ranking critical items.

CATEGORY IV--SAFETY ORGANIZATION

Category IV included the following specific recommendations:

- -- NASA should establish an Office of Safety, Reliability, and Quality Assurance (SR&QA) to be headed by an Associate Administrator who would report directly to the NASA Administrator.
- -- The Office should have direct authority for safety, reliability, and quality assurance throughout the agency.
- -- The Office should be independent of other NASA functional and program responsibilities.
- -- The Office should be assigned the work force to ensure adequate oversight.
- -- The Office should be responsible for directing a system for reporting and documenting problems, problem resolution, and trends associated with flight safety.

Establishment of SRM&QA with independence and authority throughout NASA

NASA established the Headquarters Office of SRM&QA under the direction of a new Associate Administrator reporting directly to the Administrator. Goals of the office include establishing the SRM&QA function as an aggressive contributor to agency policy and as a check and balance to the overall NASA operation and becoming the focus for all NASA SRM&QA efforts and technologies.

In implementing this recommendation, NASA included "maintainability" (a new discipline within NASA) in the new

Associate Administrator's office. Maintainability is defined as a measure of the ease and rapidity with which a system or equipment can be restored to operational status following a failure.

The safety and quality assurance functions at the Centers have also been strengthened by establishing SRM&QA offices. Reorganizations at MSFC and KSC have moved reliability and quality assurance functions from engineering organizations into consolidated SRM&QA[4] offices. The SRM&QA Directors report directly to their respective Center Directors and also have direct access to the Associate Administrator for SRM&QA to advise him on the mission planning process and readiness for any flight.

According to the Associate Administrator for SRM&QA, a statement will be added to the NASA Management Instruction for the Office of SRM&QA that the Associate Administrator for SRM&QA or his representative will be a part of major design reviews and Flight Readiness Reviews.

Additional staff and resources

According to the April 1, 1987, NASA Headquarters Short Range Program Plan for SRM&QA, one of the critical issues facing SRM&QA is resource requirements. The Associate Administrator for SRM&QA said that additional civil service staff is needed primarily in the areas of systems safety, program management, and systems assessment for technical reviews. The Associate Administrator also said that additional contractor support is needed in the quality and safety areas and for support in developing procedures.

In July 1987, NASA reported to the House Committee on Science, Space, and Technology the data shown in tables II.1 and II.2 on NASA-wide SRM&QA staff. According to the report, the amount of resources devoted to SRM&QA activities is increasing throughout NASA due to the emphasis on reestablishing the prominence of SRM&QA functions.

---

[4]According to the Associate Administrator for SRM&QA, maintainability has not officially been added in the KSC and JSC SR&QA title. He stated that while both Centers' SR&QA Offices are responsible for the maintainability function, it is uncertain when it will officially be added in their SR&QA titles.

Table II.1: NASA-Wide SRM&QA Staffing

	Fiscal year		
	1986	1987	1988[a]
Civil Service	1,092	1,314	1,424
Department of Defense	438	438	438
Support contractor	708	953	1,132
Major contractor	b	2,657	2,698

[a]Authorization estimates.
[b]Not available.

Table II.2: NASA-Wide SRM&QA Funding

	Fiscal year		
	1986	1987	1988[a]
	- - - - (millions) - - - -		
Civil Service	$47.6	$58.7	$63.3
Department of Defense	29.8	29.9	29.9
Support contractor	48.2	69.0	82.5
Major contractor	b	212.2	213.0
Various special projects	0.0	9.8	7.5[c]

[a]Authorization estimates.
[b]Not available.
[c]Tentative estimate, subject to change.

System for problem reporting and trend analysis

The NSTS Program is developing an automated data base system to support the problem reporting and trend analysis requirements of the NSTS and SRM&QA organizations. This intercenter system, called Problem Reporting and Corrective Action (PRACA), is to provide information to support the independent technical assessment of problems and trends by the SRM&QA Office. The PRACA system is to standardize and integrate the problem reporting systems of the

individual centers. Formal requirements for problem reporting, corrective actions, and associated trends were established in April 1987. Screening criteria and techniques are being developed to ensure that significant problems are elevated to the proper management level. According to NASA's June 1987 report, PRACA is scheduled to be fully operational in October 1987.

Other NASA actions

A NASA Safety Reporting System is designed to provide NASA and contractor personnel the capability to confidentially notify senior NASA SRM&QA and shuttle program management of problems that could result in loss of life or mission capability, injury, or property damage. It is not intended to replace normal management channels for reporting. The system is fashioned after the Federal Aviation Administration's Aviation Safety Reporting System and is administered through the same contractor. NASA's system became operational on June 4, 1987.

A Mishap Reporting and Corrective Action System is designed to maintain data concerning mishaps, injuries, close calls, and other safety data. As a database management system, it will allow input, retrieval, modification, and printing of mishap data. The system is also designed to generate statistical reports and severity and frequency rates of mishaps. Initial implementation has been completed and full operations are expected in 1988.

CATEGORY VI--LANDING SAFETY

Category VI included the following specific recommendations:

-- Improve the tire, brake, and nosewheel steering systems.

-- Determine the specific conditions under which planned landings at the Kennedy Space Center would be acceptable and establish criteria for tires, brakes, and nosewheel steering.

-- Improve weather forecasting capabilities.

-- Evaluate the necessity of dual ferry capability if increased landings occur at Edwards Air Force Base.

Improve the tire, brake, and nosewheel steering systems

NASA is taking a number of actions to improve the tires, brakes, and nosewheel steering system.

Tire changes

NASA is developing new tire material and is performing tests on the effects of crosswind on tread wear and tire life. These tests and potential changes are not expected to be completed prior to the next flight. Results of some of the tests will affect the future use of KSC as an end-of-mission landing site.

Tire pressure monitoring system

The orbiter has two main landing gear assemblies and a nosewheel landing gear assembly. Each assembly has two tires. NASA astronauts are concerned that low tire pressure upon orbiter landing could result in blowouts and that if one tire on the main landing gear system blows out at the time or before the nosewheel touches down, the weight of the orbiter may cause the adjacent tire to fail.

NASA is modifying the orbiter's nose and main wheels so that ground control and the orbiter pilot can monitor the tire pressure during all phases of the shuttle mission. According to NASA, this information would allow the orbiter pilot to select a safe end-of-mission landing site if tire pressure problems were to develop.

Brake improvements

NASA is in the process of making two improvements to the orbiter brakes before the next flight. One improvement involves increasing the number of hydraulic orifices (flow restrictors) in the brake hydraulic system from two to six to reduce hydraulic fluctuation during braking. This change is designed to reduce brake damage caused by vibration during landing and rollout.

The other improvement involves thickening the numbers 2 and 3 stators in each brake to reduce thermal energy induced brake damage.

Stiffened axle

NASA has modified the stiffness of the landing gear axles to reduce the vibration in landing and rollout that contributes to brake damage. The contractor is thickening the axles at certain critical points.

Carbon brake system

NASA is taking steps to update the current beryllium and carbon brake system to an all carbon brake system in the near future.

Development testing is underway to demonstrate the amount of energy absorption capacity of the new carbon brake system. According to NASA's June 1987 report, the all carbon brake system has been designed to increase the energy absorption capability by approximately 55 percent over the present system.

Nosewheel steering improvements

Nosewheel steering is used for directional steering control of the orbiter during landing. Its importance is greatest during landings with crosswinds or in the event of a blown tire(s). According to the astronaut working on landing safety, there are many single point failures on the nosewheel steering system that could render it useless and result in loss of the vehicle and/or crew in high crosswind or blown-tire landings. The contractor has completed a program impact study of a redundant nosewheel steering system for possible future implementation.

NASA is improving the nosewheel steering system by lowering the system's electronics sensitivity. This is to fine-tune its capability to alleviate overcompensation by the steering system in response to steering pressure exerted during landing. NASA officials said that they expect the change to be completed by the next flight.

Determine the conditions for Kennedy landings and establish criteria for tires, brakes, and nosewheel steering

The Commission recommended that conditions be determined under which planned landings at Kennedy would be acceptable. Furthermore, the Commission stated that criteria for tires, brakes, and nosewheel steering should be established.

NASA does not have an official position on the conditions or criteria that must be met before regular end-of-mission landings can occur again at KSC. During the first 2 years of resumed flights, all (about 8) landings will be at Edwards Air Force Base. According to NASA, during that time it will be able to gain the needed confidence in the improved safety margins of the orbiter landing systems for KSC landings. Landings at KSC will also be assessed against various studies being conducted at both the Langley and Ames Research Centers to assess orbiter landing characteristics and crosswind and runway surface impact on steering requirements and tire wear. According to NASA officials, the criteria for the improved tires, brakes, and nosewheel steering systems will be established as the testing is completed.

Some astronauts expressed concerns about the safety of using the KSC landing site for end-of-mission landings due to site conditions. The concerns center on weather forecasting, rough runway surface conditions, the moats adjacent to the runway, crosswind limitations, and orbiter components--nosewheel steering, propellant, tire pressure, brakes, and landing wheel struts. Runway modifications, such as painting, grinding, or sandblasting the surface, have been proposed to eliminate the problems that the rough runway causes for the tires. In commenting on a draft of this report, NASA officials said that NASA is still evaluating whether to modify the KSC landing strip. NASA officials also said that the tires, brakes, and nosewheel steering system improvements will tend to reduce the concerns expressed by the astronauts.

Improve weather forecasting capabilities

Since the 51-L accident, NASA has linked weather data gathering equipment at KSC, Edwards, and the Trans-Atlantic landing sites to JSC and is performing other modifications (shown in table II.3) to improve weather forecasting capabilities.

Table II.3: Weather Forecasting Capability Improvements

Location	Improvement
Kennedy Space Center	Installed backup central processing unit in the Meteorological Interactive Data Display System
	Refurbished wind sensors at landing site
	Installing radar wind profiler at the shuttle launch facility
	Locating additional weather observer at launch facility
Edwards Air Force Base	Installing new wind towers
	Approved runway wind sensors
	Installing Meteorological Interactive Data Display System workstation
	Installing radio-theodolite atmospheric sounders at runway
Johnson Space Center	Installed a Meteorological Interactive Data Display System
	Reviewing weather flight rules and launch commit criteria
	Established link to National Oceanic and Atmospheric Administration central computer facility
	Streamlining ascent winds load programs and data flow
	Establishing linkage for additional weather data from U.S. and European/African satellites
Trans-Atlantic abort landing sites	Installing automated weather stations and radio-theodolite atmospheric sounders
	Modified area weather radars
White Sands Space Harbor	Installing automated weather station
	Installing new wind towers
	Installing radio-theodolite atmospheric sounders

Additional shuttle carrier aircraft may be needed with Edwards landings

The Commission Report pointed out that increased landings at Edwards Air Force Base in California instead of at KSC in Florida may necessitate a "dual ferry capability." Currently, NASA has only one modified 747 aircraft to ferry orbiters from the landing site back to KSC for flight preparation and launch. NASA's plans to land at Edwards for the first 2 years of resumed flights give the Commission's comment added importance. The June 1987 report that the Administrator sent to the President stated that "funding for an additional aircraft has been requested." We could find no evidence of such a request being submitted to the Congress. On July 9, 1987, NASA officials informed us that the Administrator had accepted a budget submission from the Office of Space Flight that included procurement of a 747 and modification kit for inclusion in the fiscal year 1989 budget request. In commenting on a draft of our report, NASA officials said that procurement activities are underway for another ferry tail cone and additional ferry kit hardware.

Additional actions related to the recommendations

NASA has also identified and undertaken other landing safety improvements for implementation after the next flight.

NASA has selected a contractor to develop and produce a barrier restraint system for the orbiter similar to barrier nets used in the military to restrain fighter aircraft from overrunning the runways. NASA Headquarters has not yet, however, approved the installation of barrier restraints pending development testing results.

At NASA's request, the orbiter contractor studied both landing strut skids and roll-on-rims[5] to address the potential tire problems at landing. According to NASA officials, material studies and testing are underway at the Langley Research Center, and a final implementation decision has not been made.

---

[5]Skids are smooth bottom runners attached to each landing gear strut between the wheels. The purpose of the skid is to slide on the runway surface and to keep the second tire from "bottoming out" and blowing if the first tire blows. A roll-on-rim is a wheel rim made of hard material that would be designed to allow the orbiter to safely continue its landing rollout if both tires on a strut blow out.

According to a NASA contractor briefing, the current orbiter deceleration system causes significant wear on the main landing gear brakes and tires. The astronaut working with landing safety agrees with the contractor that an orbiter drag chute could solve many of the orbiter landing concerns and would require only minor structural modifications to the orbiter tail.

CATEGORY VII--LAUNCH ABORT AND CREW ESCAPE

Category VII included the following specific recommendations:

-- Make all efforts to provide a crew escape system for use during controlled gliding flight.

-- Make every effort to increase the range of flight conditions under which an emergency runway landing can be successfully conducted in the event that two or three main engines fail early in ascent.

Crew escape

In February 1987, NASA approved a pyrotechnically deployed side hatch as the accepted escape route. Modifications to the orbiter Discovery's side hatch are underway. (Discovery is scheduled for the first flight when flights resume.) The hatch was sent to the contractor for installation of the pyrotechnic devices used to blow the hatch from the orbiter in the event of an emergency escape. NASA is considering a number of alternative methods for crew exit from the orbiter following hatch deployment. Two methods receiving consideration are rocket powered extraction and a pole escape concept.

Side hatch rocket powered extraction

The Manager of the Crew Egress and Escape System at JSC stated that the side hatch rocket powered extraction system is believed to be the most viable alternative. The system uses the pyrotechnically deployed hatch to provide an escape route and tractor rockets for the separation of crew members from the orbiter during controlled gliding flight. The contractor's study of manual bailout systems concluded that tractor rockets are required to ensure that crew members safely clear the spacecraft. Figure II.2 shows the rocket powered extraction system.

Figure II.2: Side Hatch Rocket Powered Extraction System

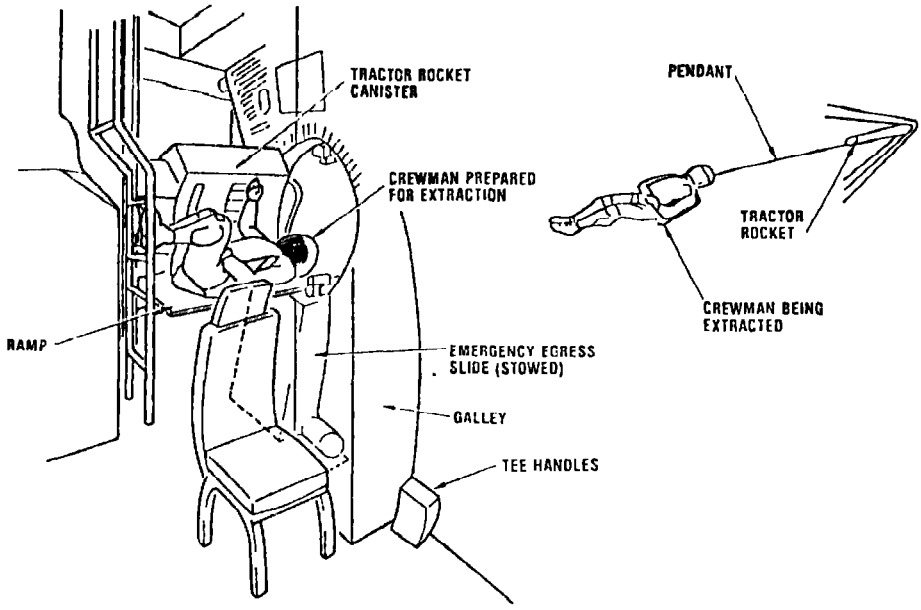

Source: NASA

The Shuttle Program Director has expressed concern over the safety implications of carrying rockets in the crew compartment. While the development of the rockets has been approved, final approval for flight is pending.

Pole escape concept

Another extraction method that is being investigated is the pole escape concept. (See fig. II.3.) Initial mock-ups have been done of this method, but NASA officials say that it is a longer-term solution and may not be ready when flights resume. NASA officials said that the goal is to have this concept available for the next flight.

Figure II.3: Pole Escape Concept

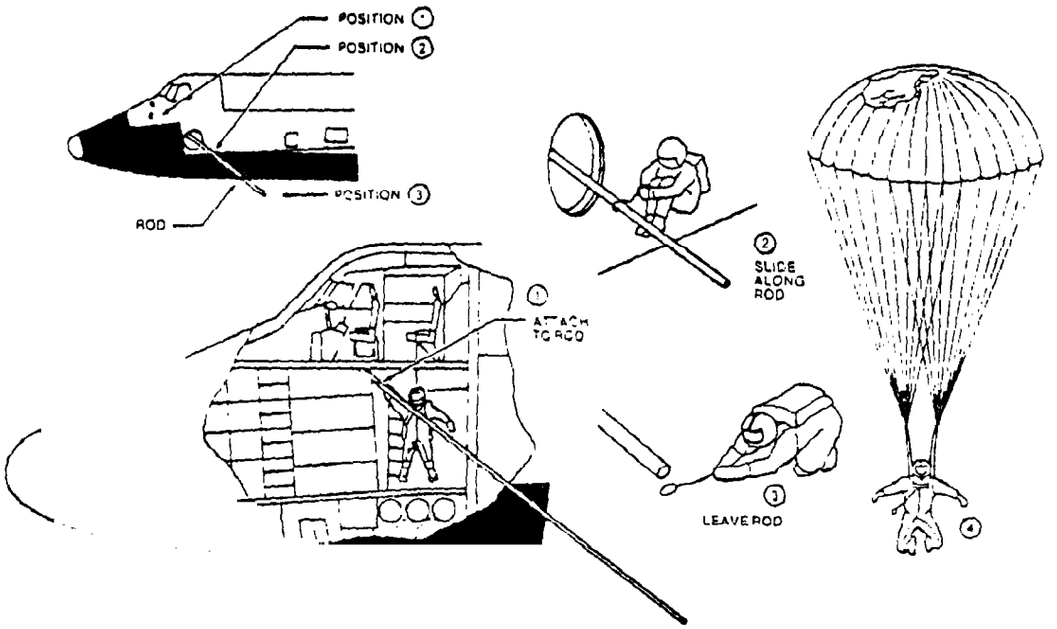

Source: NASA

Launch abort

A Launch Abort Reassessment Team was appointed at JSC to readdress all aspects of launch-phase aborts, including the question of an abort method in the event that two or three main engines fail. As part of the overall team, the Abort Modes Study Group initiated work which led to a three-phased plan for the study of shuttle contingency aborts.[6] According to NASA's June 1987 report, the overall objective of the contingency abort work is to improve the probability of crew survival, either by achieving a runway landing at an abort site or by successfully flying the vehicle to conditions which are adequate for crew escape.

One area addressed by the abort modes group was the "split-s maneuver"--a flight profile for returning the orbiter to a runway

---

[6]A contingency abort is any abort other than an intact abort which provides for the safe return of personnel, payload, and orbiter to the runway.

at the takeoff site in the event of an early failure of two or three main engines. Figure II.4 shows a "split-s maneuver." The head of the Launch Abort Reassessment Team stated that although doubts exist about the possibility of performing this routine successfully, NASA staff is working to expand the existing aerodynamics database to determine if the orbiter could withstand the aerodynamic forces of the "split-s." According to NASA officials, the software for the "split-s" maneuver will be installed in the shuttle's computer by the next flight.

Figure II.4: Split-S Maneuver in the Case of Three Main Engines Failing at Lift-off

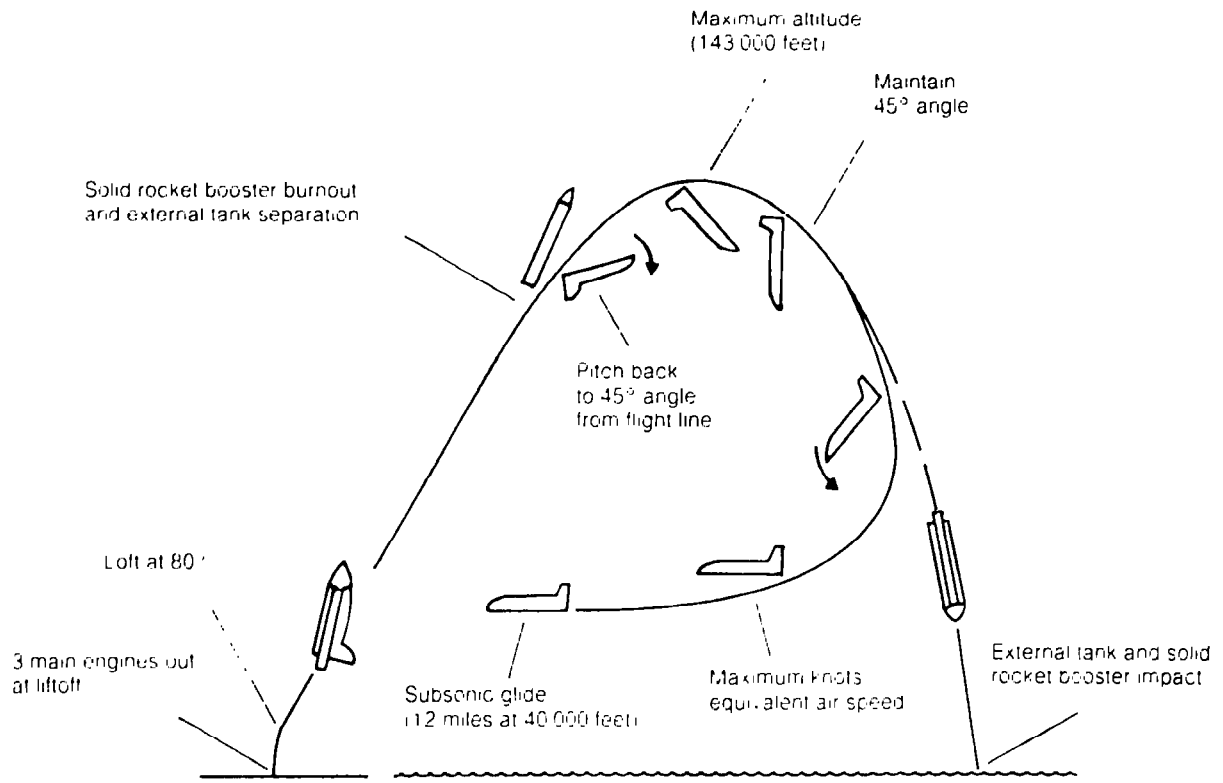

Source: NASA

CATEGORY VIII--FLIGHT RATE PROJECTIONS

Category VIII included the following specific recommendations:

- -- The nation should avoid relying on a single launch capability in the future.
- -- NASA must establish a flight rate that is consistent with its resources.
- -- A firm payload assignment policy should be established.

Avoid relying on a single launch capability

Several actions over the past year have contributed to reducing reliance on the shuttle as the nation's single launch capability. According to NASA's June 1987 report, NASA and the Department of Defense have jointly established, and are implementing, a mixed-fleet concept of expendable launch vehicles and the shuttle. Many Defense payloads previously scheduled for shuttle launches are being rescheduled for launches on expendable vehicles. In addition, many commercial payloads that had been scheduled for the shuttle have been rescheduled for commercial launches. This latter action is in line with the presidential decision to limit use of the shuttle for launch of commercial and foreign payloads to those that have national security or foreign policy implications, or are shuttle unique.

In response to a request by the Administrator of NASA, the Office of Space Flight studied the use of a mixed vehicle fleet for launching approved and planned NASA missions. The results of the study, presented to the NASA Administrator in December 1986, concluded that a mixed launch fleet is required.

Projected flight rate

NASA established a Flight Rate Capability Working Group to determine a safe, sustainable NSTS flight rate. Additionally, a Mission Operations Directorate study assessed NASA's current and future flight rate capabilities in three areas: (1) total manpower; (2) facility capacity, which consists of secure and nonsecure facilities; and (3) critical skills.

On March 4, 1987, NASA projected the "realistic" flight rate shown in table II.4. These projections assumed the next flight would be in February 1988 and the fourth orbiter would be delivered in May 1991. In its budget estimates for fiscal year 1989 submitted to the Office of Management and Budget, NASA revised its projected

flight rate to a maximum of 14 in fiscal year 1994 (see table II.4).

Table II.4: NASA's Projected Flight Rate

	Flights per fiscal year						
Date of planned flight rate	1988	1989	1990	1991	1992	1993	1994
March 4, 1987	4	9	10	13	15	16	a
September 1, 1987	2	6	10	11	12	13	14

[a]No data for 1994 included in the March projection.

At the request of the Chairman of the Subcommittee on HUD-Independent Agencies, House Committee on Appropriations, NASA contracted with the National Research Council for an independent flight rate assessment. NRC concluded that, using the current 3-orbiter inventory, NASA can sustain, under certain conditions, a flight rate of 8 to 10 flights per year from KSC. For a 4-orbiter fleet, NRC concluded that a sustainable flight rate would be 11 to 13 flights per year from KSC with some additional qualifications, such as limits on the launch-processing facilities at KSC, limits on mission operations facilities and skilled personnel at JSC, additional time demanded by increased program review and oversight, as yet undefined new safety rules, need for improvement in crew training facilities, and necessary logistic support.

Factors needed to achieve projected flight rate

Based on its studies, NASA believes it must increase its total manpower and make major enhancements to its facilities at JSC and KSC.

-- The Mission Operations Directorate study determined that current manpower levels would support eight flights per year and recommended manpower increases to support projected flight rates. The projected manpower increase takes into account the critical skill requirements needed to sustain the projected flight rate. As part of the manpower increases, NASA has also incorporated shuttle processing turnaround improvements into its plans.

-- The Mission Operations Directorate study pointed out that certain facility enhancements are needed to sustain the projected flight rate announced in March 1987. According to the study, the following facilities need upgrading: shuttle mission simulator, launch processing system, software production, and mission control center. Other enhancements include the acquisition of a fourth orbiter, a fourth shuttle training aircraft, a third orbiter processing facility, and sufficient spares provisioning.

According to NASA officials, NASA will monitor the funding and turnaround improvement requirements and adjust the realistic flight rate assessment accordingly in order to preserve consistency between flight rates and support capability.

Payload assignment policy

As of July 9, 1987, NASA was establishing a manifest policy, which includes a payload assignment policy. According to NASA's June 1987 report, firm policies have been established and a formal control process has been implemented to ensure the stability of future cargo manifests, i.e., minimize changes to the manifest. As described in the report, the control process provides for a series of freeze points at specified intervals. Freeze points are defined and documented in the program directive with milestones. For example, approximately 18 months before launch, the flight production process begins with a flight/cargo freeze point that establishes the primary payload assignments and defines the orbiter vehicle configuration. Subsequent to the freeze point, only mandatory changes required to ensure crew or vehicle safety, or the accomplishment of primary mission objectives, will be made. Any change must be reviewed by senior program managers through the shuttle change control process.

CATEGORY IX--MAINTENANCE SAFEGUARDS

Category IX included the following specific recommendations:

-- Establish a system of analyzing and reporting performance trends of Criticality 1 items.

-- Specify maintenance procedures for Criticality 1 items in the CIL.

-- Develop and execute a comprehensive maintenance inspection plan for the orbiters.

-- Perform periodic structural inspections on the orbiters when scheduled and do not permit them to be waived.

-- Restore and support the orbiter maintenance and spare parts programs.

-- Stop the practice of removing parts from one orbiter to supply another.

System for analyzing and reporting performance trends of Criticality 1 items

The System Integrity Assurance Program (SIAP) Plan includes a management information system called the Program Compliance Assurance and Status System (PCASS), which will compile data from the project elements to provide data for systems analysis, work accounting, problem reporting, and management action. The PCASS will be implemented at the program management level and will interface with and use existing data bases at the various NASA centers. The data base will contain (1) "closed-loop accounting" (required actions traced and compliance verified) and mission flow status; (2) integrated problem status, assessment, and closure rationale; (3) critical item status and FMEA/CIL hazard data repository; and (4) trend analysis (reliability, maintainability, and supportability).

In addition, SIAP requires that performance monitoring and trend analysis be performed on selected Criticality 1, 1R, 1S, and 2 line replaceable units[7] to predict when operational limits will be exceeded and to identify pending failures. The design project element and the launch and landing project element shall select line replaceable units for performance monitoring based on criticality and the ability to perform quantitative performance measurements during ground and/or flight operations.

Specify maintenance procedures for Criticality 1 items in the CIL

Although NASA says that it will not specify maintenance procedures for Criticality 1 items in the CIL, the Manager of the Shuttle Engineering Integration Office said that NASA is meeting the intent of this recommendation. He stated that the closed-loop accounting

---

[7]Any assembly that can be removed and replaced as a unit from the system at the operating location.

system in SIAP will track the Criticality 1 items to determine if the maintenance procedures have been successfully accomplished. He added that the Criticality 1 items will now be annotated in the operations and maintenance instructions.

Comprehensive maintenance inspection program for the orbiters

The NSTS Engineering Integration Office implemented the SIAP plan on April 8, 1987. The plan defines the requirements for a comprehensive program to assure that the flight and ground systems retain their design performance, reliability, and safety. System integrity assurance includes those configuration, maintenance, operations, and analysis activities, starting with initial hardware acceptance tests and continuing through the life of the hardware, which are required to assure safe and reliable operation of the space shuttle. These activities are performed at the launch and landing sites, JSC, MSFC, element contractor facilities, other off-line repair and maintenance facilities, and during flight operations.

The plan defines the documentation and implementation requirements for hardware inspection and schedules; configuration, operations, and maintenance requirements; logistics requirement; closed-loop accounting; and safety, reliability, and quality assurance requirements. In addition, the plan defines organizational responsibility, reporting, and control requirements for the NSTS maintenance activities.

The plan requires that each Element Project Manager develop and submit for approval an element project implementation plan to the NSTS Engineering Integration Office. This includes developing maintenance, inspection, and refurbishment requirements to ensure that hardware retains design reliability, safety, and performance for the life of the program.

In addition to SIAP, NASA Headquarters issued directions for review and update of all maintenance requirements and instructions. Reviews are scheduled on a subsystem basis to update all launch site maintenance requirements and procedures. Documentation is also being updated.

Perform periodic structural inspections when scheduled and do not waive

According to NASA officials, NASA will continue to permit waiving of structural inspections. The Manager of the Shuttle Engineering Integration Office stated that the inspection requirements have

been restructured; however, NASA must depend on management's discipline to ensure that the inspections are performed. Before the 51-L accident, only program managers could waive inspections. Although this requirement has not changed, according to the Manager, the difference at the present time is the program managers' awareness that the inspections should be performed and that a tracking system will ensure that waived inspections will be reported.

The SIAP requires a closed-loop accounting system, which should ensure compliance with program configuration, operations, and maintenance requirements. The Manager stated that if inspections are waived, the system will record the waivers and reports will be issued showing the waivers.

Maintenance and spare parts programs

The SIAP requires that logistics support plans be developed and implemented by the project elements. The plan is to be designed to provide sufficient spares and provisions to support the flight-to-flight reconfiguration, maintenance operations, and the replacement of failed and limited-life line replaceable units without requiring the removal of parts from one orbiter for use on another.

In July 1986, logistics responsibility for the orbiter was transferred from JSC to KSC. According to the Deputy Director of Shuttle Logistics at KSC, a number of corrective actions have been taken to restore and support maintenance and spare parts, including increased budgets, revised lay-in schedules, increased range and depth of spare parts inventories, emphasis on depot development, and management controls. According to NASA officials, an Orbiter Logistics Management Plan was submitted to the Congress in August 1987. Furthermore, the orbiter prime contractor has established a Logistics Service Center near KSC, which provides field maintenance capability for orbiter subsystem elements.

Stop the practice of removing parts from one orbiter for use on another

The Deputy Director for Shuttle Logistics at KSC stated that cannibalization will never be eliminated. However, he said that after the actions relating to spare parts and logistics have been initiated, cannibalization will decrease. He said that it has occurred because of (1) unavailable assets and/or (2) engineering.

The Deputy Director also said that prior to the 51-L accident, the Shuttle Engineering and Shuttle Operations Offices at KSC approved

the removal of components from one orbiter for installation in another. However, the SIAP now requires that the Program Director/Headquarters Program Requirements Control Board approve the removal of components from one orbiter for installation in another. According to the Manager of the Shuttle Engineering Integration Office, NASA plans to track cannibalization with the SIAP closed-loop accounting system. When it occurs, periodic reports will be issued.

PRESENT AND FORMER ASTRONAUTS IN MANAGEMENT POSITIONS AS OF JUNE 30, 1987

Name	Official title/office
Adamson, James C.	Assistant Manager for Engineering Integration, JSC
Bobko, Karol	Assistant for Operations, Flight Crew Operations, JSC
Bolden, Charles	Chief, Safety Branch, JSC
Brandenstein, Daniel C.	Chief, Astronaut Office, JSC
Cabana, Robert	Deputy Chief of Aircraft Operations Division, JSC
Crippen, Robert L.	Deputy Director, NSTS Operations, KSC
Duffy, Brian	Technical Assistant to Director, Flight Crew Operations, JSC
Dunbar, Bonnie J.	Chairman, NASA Microgravity Science Assessment Task Force, JSC
Gregory, Frederick D.	Chief of the Operational Safety Branch, Safety Division, Office of SRM&QA, NASA Headquarters
Hartsfield, Henry W.	Deputy Director, Flight Crew Operations, JSC
O'Connor, Bryan D.	Assistant Manager for Operations, NSTS, JSC; Chairman, Space Flight Safety Panel, Office of SRM&QA, NASA Headquarters
Ride, Sally K.	Acting Assistant Administrator, Office of Exploration, NASA Headquarters (Dr. Ride has subsequently resigned her position at NASA.)
Shaw, Brewster H.	Chairman, Orbiter Modification Team, JSC
Truly, Richard H.	Associate Administrator, Office of Space Flight, NASA Headquarters

Name	Official title/office
Weitz, Paul J.	Deputy Director, JSC
Young, John W.	Special Assistant to Director for Engineering, Operations, and Safety, JSC

Note: In its June 1987 report to the President, NASA reported fewer astronauts in management positions. NASA did not include those astronauts in management positions in the Flight Crew Operations Office, the Astronaut Office, or JSC's Microgravity Science Assessment Task Force.

(392259)

Requests for copies of GAO publications should be sent to:

U.S. General Accounting Office
Post Office Box 6015
Gaithersburg, Maryland 20877

Telephone 202-275-6241

The first five copies of each publication are free. Additional copies are $2.00 each.

There is a 25% discount on orders for 100 or more copies mailed to a single address.

Orders must be prepaid by cash or by check or money order made out to the Superintendent of Documents.

United States
General Accounting Office
Washington, D.C. 20548

Official Business
Penalty for Private Use $300

Address Correction Requested

First-Class Mail
Postage & Fees Paid
GAO
Permit No. G100