124415

ACCOUNTING AND FINANCIAL MANAGEMENT DIVISION
PROGRAM AND BUDGET INFORMATION GROUP

April 1984

At the Comptroller General's urging, and with the cooperation of the Deputy Secretary of Defense, a joint Department of Defense (DOD)/GAO working group was formed to study DOD's Planning, Programming, and Budgeting System (PPBS). The results of this unprecedented collegial study are contained in this 204 page document which was released to the Comptroller General and the Deputy Secretary of Defense in September 1983

The working group believes that while the DOD's PPBS continues to be an extensively developed and flexible resource allocation system that supports its decisionmaking opportunities for improvements exist. The document presents several alternatives which both DOD and GAO are now reviewing with an eye towards determining preferences and selecting the proper mix of actions and a schedule of change.

Any inquiries regarding this study may be directed to Howard G. Cohen, Group Director (202)275-4358, or to me (202)275-4825).

KENNETH W. HUNTER
Senior Associate Director

TABLE OF CONTENTS

CHAPTER 1: INTRODUCTION....1

Working Group Membership....2

Methodology....3

The Study's Boundaries and Definition of PPBS....7

CHAPTER 2: DESCRIPTION OF THE PROCESS AND THE ENVIRONMENT....13

The PPBS Process Today....13

A Brief History of PPBS in DOD....17

Environmental Realities....22

Summary....30

CHAPTER 3: AREAS OF POTENTIAL IMPROVEMENT OF PPBS....31

Section 1: Planning, Its Linkage with Programming, and Cross-Service Analysis....31

Section 2: Time Horizon and Out-Year Uncertainties....47

Section 3: Structures of Information in PPBS....55

Section 4: Budget Presentation and Justification....63

Section 5: Managerial Flexibility and Legislative Control....70

Section 6: Timing and Work Intensity....81

Section 7: Programmatic Analysis of Operating Accounts....91

Section 8: Compatibility Among Management Information Systems....97

Section 9: Management Review, Evaluation and Feedback....105

CHAPTER 4: AN AFTERWORD: SOME MANAGEMENT IMPLICATIONS OF A CHANGE IN APPROPRIATION ACCOUNTS....113

Some Historical Background....114

PPBS is DOD's Translation System....115

The Difficulty for the Congress....116

The Congress Not Limited to Appropriations Structure for Policy Review....117

Consideration of Appropriations Structure under McNamara....118

The Possible Consequences of a Change in the Appropriations Structure....119

APPENDIX I: SUMMARY OF ALTERNATIVES AND THE ORGANIZATIONS INVOLVED IN CHANGES....125

APPENDIX II: PPBS PROCESS FLOWCHARTS....131

Section 1: OSD PPBS....133

Section 2: DOD Budget Presentation and Related Congressional Activities....141

Section 3: Army PPBES....145

Section 4: Navy PPBS....163

Section 5: Air Force PPBS....175

Section 6: Marine Corps PPBS....189

APPENDIX III: ABBREVIATIONS AND ACRONYMS....195

APPENDIX IV: SELECTED BIBLIOGRAPHY....200

OVERVIEW

This document presents to the Deputy Secretary of Defense and the Comptroller General of the United States the Joint DOD/GAO Working Group's views on DOD's Planning, Programming, and Budgeting System (PPBS). This responds to their decision, in the fall of 1982, to undertake a cooperative DOD/GAO study of PPBS. The immediate objectives were to develop descriptions of PPBS and its phases and to identify potential improvements. It was also hoped that the study would contribute to the interchange of financial management ideas and concepts throughout the federal government.

The document contains descriptions of the various PPBS phases in the military departments and in the Office of the Secretary of Defense (OSD), thereby providing needed and valuable documentation of a complex and often poorly understood set of concepts and procedures. Also included are areas identified by the Joint Working Group as needing improvements, along with various alternative approaches for making these improvements. It is intended that the alternatives will serve as a catalyst for formulating action plans to implement changes.

GAO provided the Director of the Working Group, several senior analysts, and consultant services. Four DOD members represented the three military departments and OSD. The Working Group's composition brought together personnel with a wide variety of in-depth PPBS subject matter and methodological expertise, which permitted the Group to identify areas of investigation and arrive at judgments with minimal field work. The Working Group's unique make-up also increased its access to knowledgeable PPBS participants and related information. This facilitated the Group's understanding of the complex system, its real problems, and the various alternatives for possible improvements.

The Working Group reviewed previous studies, interviewed current and former PPBS participants, and compiled an inventory of assorted problems that formed the basis for a synthesized set of major areas for investigation. These areas were then examined through a series of meetings with key personnel in OSD, the services, the Office of Management and Budget (OMB), the National Security Council, and the Congress.

The Working Group believes that DOD's PPBS continues to be an extensively developed and flexible resource allocation system that supports its decisionmaking. Few, if any, other federal agencies have done as much to systematically set goals and objectives, establish needed fiscal resources, and review the results of their activities. Still, there is room for improvements. The document presents several alternatives for consideration in the following areas (see appendix I for a complete listing of the alternatives):

PLANNING, ITS LINKAGE WITH PROGRAMMING, AND CROSS-SERVICE ANALYSIS:

--Steps could be taken to improve the way an incoming administration articulates its strategy posture and affects PPBS decisions. (See pp. 42-43.)

--There is an apparent need for an objective review of the quality, consistency, and effectiveness of cross-service analysis and evaluation. (See pp. 44-45.)

--Options are available to enhance understanding among DOD personnel of key PPBS-related concepts, terms, and linkages, including the links between national defense policysetting and PPBS. (See pp. 45-46.)

TIME HORIZON AND OUT-YEAR UNCERTAINTIES:

--Long-range planning could be improved by changes in the content, categories, and timing of the military services' Extended Planning Annexes (EPAs). Also, OSD could make more use of the EPAs. (See pp. 52-54.)

STRUCTURES OF INFORMATION IN PPBS:

--Actions are needed to overcome confusion concerning uses of the "four pillars of defense" concept. (See pp. 59-60.)

--DOD's Five Year Defense Plan (FYDP) data base may need revising either by creating new Program Elements (PEs) or by altering the PE groupings in ways that better serve the evolutionary needs of Defense decisionmakers. (See pp. 60-61.)

--Alternatives are available for improving the budget phase of PPBS by changing the way Program Budget Decisions (PBDs) are acted upon. Changes in reclama procedures could help. (See pp. 61-62.)

BUDGET PRESENTATION AND JUSTIFICATION:

--Recent improvements in DOD's budget justification materials do not appear to have addressed certain fundamental questions, including

limitations in the usefulness of the justifications for addressing mission questions, the out-year effects of program and budget decisions, and up-to-date budget execution matters. Steps to address these fundamental questions are warranted. (See pp. 67-69.)

MANAGERIAL FLEXIBILITY AND LEGISLATIVE CONTROL:

--Opportunities exist for streamlining the reprogramming request process in both DOD and the Congress without sacrificing the time required to make informed decisions. (See pp. 76-77.)

--DOD, OMB, and the Congress could improve the clarity and timing of decisions by including pay raises in the regular appropriations requests and bills rather than in supplemental actions. Also, the Congress could help by minimizing undistributed adjustments and, especially, avoiding the mandating of large absorption rates on pay raise funding. (See pp. 77-79.)

--Discussions are needed between DOD and congressional officials on the level of detail in appropriations so that the budget consideration process can be streamlined, allowing a better focus for decisionmaking. DOD could explore with appropriate committees the possibility of aggregating some procurement line items along generic lines. (See pp. 79-80.)

TIMING AND WORK INTENSITY:

--Steps possibly could be taken to eliminate unnecessary duplication between the programming and budgeting phases of PPBS. (See pp. 85-87.)

--Other steps might redistribute workload into more productive channels by reducing the frequency of certain steps or analyses now performed annually. (See pp. 88-89.)

--The preparation by OSD of PBDs as a consolidated document could facilitate better analyses and decisions. The current practice of issuing numerous PBDs over several weeks can lead to conflicting decisions on related matters, which increases the need for revisiting decisions. (See pp. 89-90.)

PROGRAMMATIC ANALYSIS OF OPERATING ACCOUNTS:

--Actions are needed to better analyze, and report on, the relationship of alternative resource levels and mixes to increased or decreased war fighting readiness and sustainability. Officials could undertake several initiatives with this objective. (See p. 96.)

COMPATIBILITY AMONG MANAGEMENT INFORMATION SYSTEMS:

--There is a need for more compatibility among management information systems supporting PPBS and greater coordination of efforts underway to enhance compatibility. Several options to improve coordination are available, including (but not restricted to) assigning special responsibilities to existing offices or establishing new organizations. (See pp. 102-103.)

--The existing PPBS information structures and information systems need a major review. As a first step, a review of the uses and adequacy of existing PPBS data bases and of the information flows that provide the data could be conducted as a basis for defining the broad information architecture needed to support PPBS and for developing a PPBS Information Plan. (See p. 104.)

MANAGEMENT REVIEW, EVALUATION AND FEEDBACK:

--Initiatives could be taken to work with the audit agencies and internal review offices to improve reviews of the results of Defense programs and the use of the review information in PPBS. The initiatives would aim at increasing reviews of performance in terms of outputs and goals; increasing the comprehensiveness of reviews; and enhancing the currency, accuracy, and completeness of the data and information used in PPBS. (See pp. 111-112.)

The document's alternatives for improving PPBS would entail actions by various organizations: OSD, other components of DOD, the Executive Office of the President, and the Congress. Appendix I identifies the organizations that would be involved in the changes. (See pp. 125-129.)

CHAPTER 1: INTRODUCTION

The Comptroller General and the Deputy Secretary of Defense agreed during the fall of 1982 to undertake a joint study of the Department of Defense's Planning, Programming, and Budgeting System (PPBS). This is the first of several joint studies of federal financial management systems that the Comptroller General plans to undertake in cooperation with the executive departments and agencies.

In undertaking those studies, the Comptroller General expects to further the development of financial management throughout the federal government by exchanges of analyses and consultation as well as by identifying improvements in particular financial management systems. The purpose of this study of the PPBS is twofold: first, to provide an understanding of current practice and theory as a resource for the Comptroller General's overall effort; second, to identify potential further improvements in PPBS itself that would benefit the Department of Defense (DOD). It is intended that the document serve as a catalyst for deciding on needed improvements and for formulating action plans for implementation.

DOD was chosen for the first of these joint studies because it has one of the most highly developed resource management systems in the federal government. During the past 2 decades, DOD has developed a comprehensive set of processes, systems, and techniques for making decisions about and managing its resources. This systematic approach is rooted in the PPBS concept as modified, adapted, and expanded over the years. PPBS was conceived as a systematic output, or results oriented, way of looking at resource management. Because DOD has been at the forefront of these systematic financial management methods, its efforts have been frequently studied and critiqued by both observers and participants.

The study has a broad systems perspective with special attention to linkages among the various processes, systems, and practices that now comprise policymaking and management in DOD. The effectiveness of the individual procedures, subsystems, analytic techniques used, etc., was not the purpose of this study. Such reviews have been conducted by both the General Accounting Office (GAO) and DOD.

The results of this study are (1) documentation of the broader, systematic policymaking and management processes of DOD and (2) identification of alternative approaches to making further improvements in the overall PPBS.

WORKING GROUP MEMBERSHIP

The Joint DOD/GAO Working Group on PPBS was under the direction of Kenneth W. Hunter, Senior Associate Director, Program Analysis Division, General Accounting Office, and included a staff of 4 DOD personnel, 11 GAO personnel, and 4 consultants to GAO.

Joint Working Group Membership

Kenneth Hunter, Project Director

GAO[1]	DOD
Howard Cohen	Henry Angelino (Army)
Edward Cole	Robert Downey (Navy)
Blake Cornish	Thomas Fox (Air Force)
Claire Doyle	Leland Jordan (Office of the Secretary of Defense)
Brad Hathaway	
Emilie Heller	
William Jenkins	**Consultants**
James Kirkman	
Nelson Payne	Audrey Clayton
Kurt Schildknecht	Timothy Mack
	Norman Nisenoff
	Elizabeth Powell

Chapters 1 and 2 of this report outline the framework within which the Working Group reviewed PPBS, including a definition of the study's boundaries, a brief description of the objectives of PPBS, a discussion of several important environmental factors affecting PPBS, and a brief history of its evolution. Chapter 3 identifies areas where potential for further improvement may exist. Included in chapter 3 are the reasons the Working Group chose these areas; the perceptions developed by the Working Group as a result of interviews of current participants in the process concerning these issues, conducted in May and June; and possible alternatives for improvement,

---

[1]Able assistance was provided at various times during the study by other GAO personnel: Harold Brumm, Timothy DiGuiseppe, Belva McFarlin, Lloyd Miller, Elaine Petway, Gerald Salesses, James Stringfellow, Michael Williams, and Patricia Zemple.

including the pros and cons associated with each alternative. Chapter 4 discusses some of the implications for both DOD and the Congress if the structure of DOD's appropriations were to be changed.

METHODOLOGY

The Working Group's methodology was derived from two initial guidelines: to do a fairly quick study, which was to be completed in a few months, and, related to the first, to rely heavily on the numerous, already completed studies of PPBS and the expertise of the members of the Working Group for identifying areas for concentration and for developing alternative approaches to improvements. It was intended that this approach would minimize the need to conduct field investigations. The staffing of the Working Group (with DOD and GAO analysts having experience in PPBS, congressional operations, and general financial management procedures) provided the needed expertise for identifying areas of focus and, later, for making judgments about alternatives for improvements.

The Working Group began by reviewing previous studies and writings on PPBS and interviewing current and former PPBS participants to (1) develop a more thorough understanding of PPBS' purpose, theory, design, and operations; and (2) compile an initial inventory of perceived problem statements. This inventory, numbering 350 perceived problem statements, was entered into a data base and coded by source, PPBS phase, and pertinent DOD organization. The statements were then evaluated with the goals of eliminating duplication and, viewing the statements as symptoms of systemic malfunctions or design problems, producing synthesized problem statements, which were grouped into broad problem areas. Rather than addressing the quality of specific decisions, the areas identified possible weaknesses concerning how decisions are made. After subsequent review and discussion throughout the remainder of the effort, a consolidated set of nine problem areas was agreed upon:

1. Planning, its linkage with programming, and cross-service analysis
2. Time horizon and out-year uncertainties
3. Structures of information in PPBS
4. Budget presentation and justification
5. Managerial flexibility and legislative control
6. Timing and work intensity

7. Programmatic analysis of operating accounts

8. Compatibility among management information systems

9. Management review, evaluation and feedback

The relationship of these topics to PPBS events is shown in figure 1. These areas are not mutually exclusive. Furthermore, the areas were formulated to consolidate key problem statements and, consequently, do not necessarily touch upon all facets of PPBS.

A team leader was assigned to each area, with primary responsibility for developing questions to guide further investigation, conducting interviews, assessing the results of that investigation, and developing alternatives for improvement. The Working Group recognized that several of the areas were related and should be coordinated--in most cases the same study team dealt with related issues.

The Working Group realized that to enhance its understanding of the functioning of PPBS in these areas, to clarify opportunities for further improvement, and to develop alternative solutions would require working with individuals currently involved in PPBS. Thus, the questions developed by each team, and reviewed by the Working Group, became the basis for identifying the appropriate persons in DOD with whom to discuss each area. Because of their detailed knowledge of their individual organizations, the DOD members of the Working Group had primary responsibility for identifying the persons and offices to visit. Due to time constraints, interviews were conducted at the headquarters level only.

Based largely on the information and perceptions obtained in these meetings, opportunities for further improvement were identified by the team and alternatives developed. The results of issue team reviews, the areas for improvement, and the alternatives were repeatedly examined and refined by a review board, consisting of the Project Director, the team leaders, and the DOD members of the Working Group. The alternatives from all areas constitute a set of 41 initiatives, described separately in chapter 3, and listed in appendix I. The Working Group has not developed specifics regarding implementation, nor made assessments of the effects of such actions. Each alternative was formulated to address an individual problem area, and no evaluation was conducted of its potential effects on other areas studied nor upon the PPBS process in its entirety. Such assessements should be made by DOD or other initiating organizations as part of the process of selecting alternatives and methods of implementation.

Figure 1

DEPARTMENT OF DEFENSE
PLANNING, PROGRAMMING AND BUDGETING SYSTEM

PROCESS OVERVIEW:
A FRAMEWORK FOR THE JOINT GAO/DOD STUDY

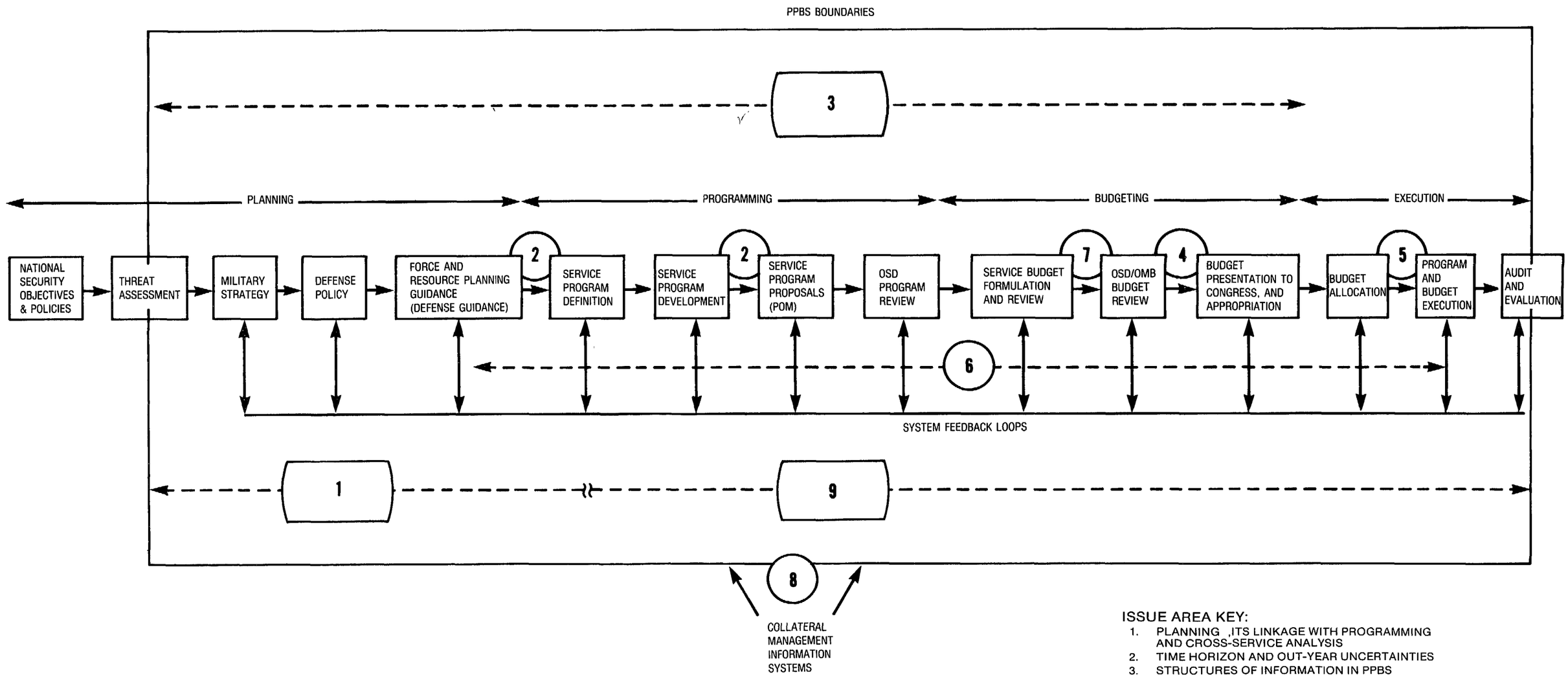

ISSUE AREA KEY:

1. PLANNING ,ITS LINKAGE WITH PROGRAMMING AND CROSS-SERVICE ANALYSIS
2. TIME HORIZON AND OUT-YEAR UNCERTAINTIES
3. STRUCTURES OF INFORMATION IN PPBS
4. BUDGET PRESENTATION AND JUSTIFICATION
5. MANAGERIAL FLEXIBILITY AND LEGISLATIVE CONTROL
6. TIMING AND WORK INTENSITY
7. PROGRAMMATIC ANALYSIS OF OPERATING ACCOUNTS
8. COMPATIBILITY AMONG MANAGEMENT INFORMATION SYSTEMS
9. MANAGEMENT REVIEW, EVALUATION, AND FEEDBACK

Access to documents

The Working Group had access to those documents and manuscripts that are regularly provided to the Congress. Since the Congress does not have routine access to the Defense Guidance (DG), each service's Program Objective Memorandum (POM), the approved current Five Year Defense Plan (FYDP), or most out-year data, neither did the Working Group.

Several topics pursued by the Working Group required an understanding of how the data and documents that were not available for the Group's review were generated and used. The analysis for these topics relied upon explanation by DOD personnel of the contents of the documents, their format, and the use made of them. Selected examples were provided to the Working Group to illustrate generally the types of projections and future data generated and used in PPBS. In these areas in particular, the analysis relied on interviews, DOD personnel's explanations of documentation, and examination of historical examples that excluded actual data pertinent to future years.

The Working Group provided copies of its draft report to DOD and GAO personnel for their review and comment. Following receipt of suggestions from these individuals, some changes were made, mainly to improve the technical points and factual statements.

THE STUDY'S BOUNDARIES AND DEFINITION OF PPBS

PPBS is an annual, sequential series of events leading to the development, approval, and execution of DOD's budget. The events within the PPBS cycle are formally defined as are the responsible organizational elements. Less formally defined, but equally integral to the functioning of PPBS, are the interactions between the phases and steps of the system, and the organizational and individual participation in the process, that bring it all together. In addition, while organizationally external to PPBS at DOD, presidential and congressional actions and guidance constitute major decision elements in PPBS.

While some of the program information required and many of the detailed execution aspects of PPBS involve all echelons of the DOD organization, the Working Group concentrated its review on the Washington headquarters activities in the system. This was done so as to capture the broadest possible overview of the system as it brings together the major elements of PPBS. The review also included the role of the Congress as the final

determinant of resource availability, in contrast to the general view of PPBS that is limited to DOD internal resource allocation.

Therefore, the definition used here includes the planning, programming, budgeting, and execution phases, beginning with the planning activities of the Office of the Secretary of Defense (OSD) and the Joint Chiefs of Staff (JCS), including consideration of the National Security Council (NSC) activities, and ranges through program guidance into program and budget development, congressional review and action, execution, and evaluation.[2] The major participants in PPBS as thus defined are the OSD, JCS, the headquarters of the military departments, the Executive Office of the President (EOP) (including the NSC and the Office of Management and Budget (OMB)), and the committees of the Congress.

This broad definition allows PPBS to be examined in the context of overall federal financial management, which includes participants other than those immediately responsible for the budgetary proposals prepared by the individual cabinet departments and federal agencies. As shown in figures 2 and 3, financial management can be viewed both within its departmental context and as part of financial management government-wide. Within a department or agency financial management can be conceptually viewed as a closed loop, with four major phases--planning/programming, leading sequentially to budget formulation/presentation, budget and program execution/monitoring, and finally audit/evaluation, the results of which provide information for action on current activities and subsequent cycles. As figure 3 shows, however, within the broader context of financial management government-wide, individual department and agency resource allocation and management systems, including PPBS, are only part of the total picture.

Directly and indirectly, the individual agency financial management systems are affected by the actions of such others as the EOP, the Congress, GAO, and the Department of the Treasury. Viewing PPBS in this way permits one to consider potential opportunities for improving PPBS that require either action or acquiescence on the part of other major participants in federal financial management.

---

[2]The Army uses the abbreviation "PPBES," with the "E" standing for "Execution," while other parts of DOD use the more familiar "PPBS." The Working Group uses the more common "PPBS" to refer to procedures throughout DOD, except that "PPBES" is used in certain Army-specific discussions.

Figure 2

FEDERAL FINANCIAL MANAGEMENT PROCESSES

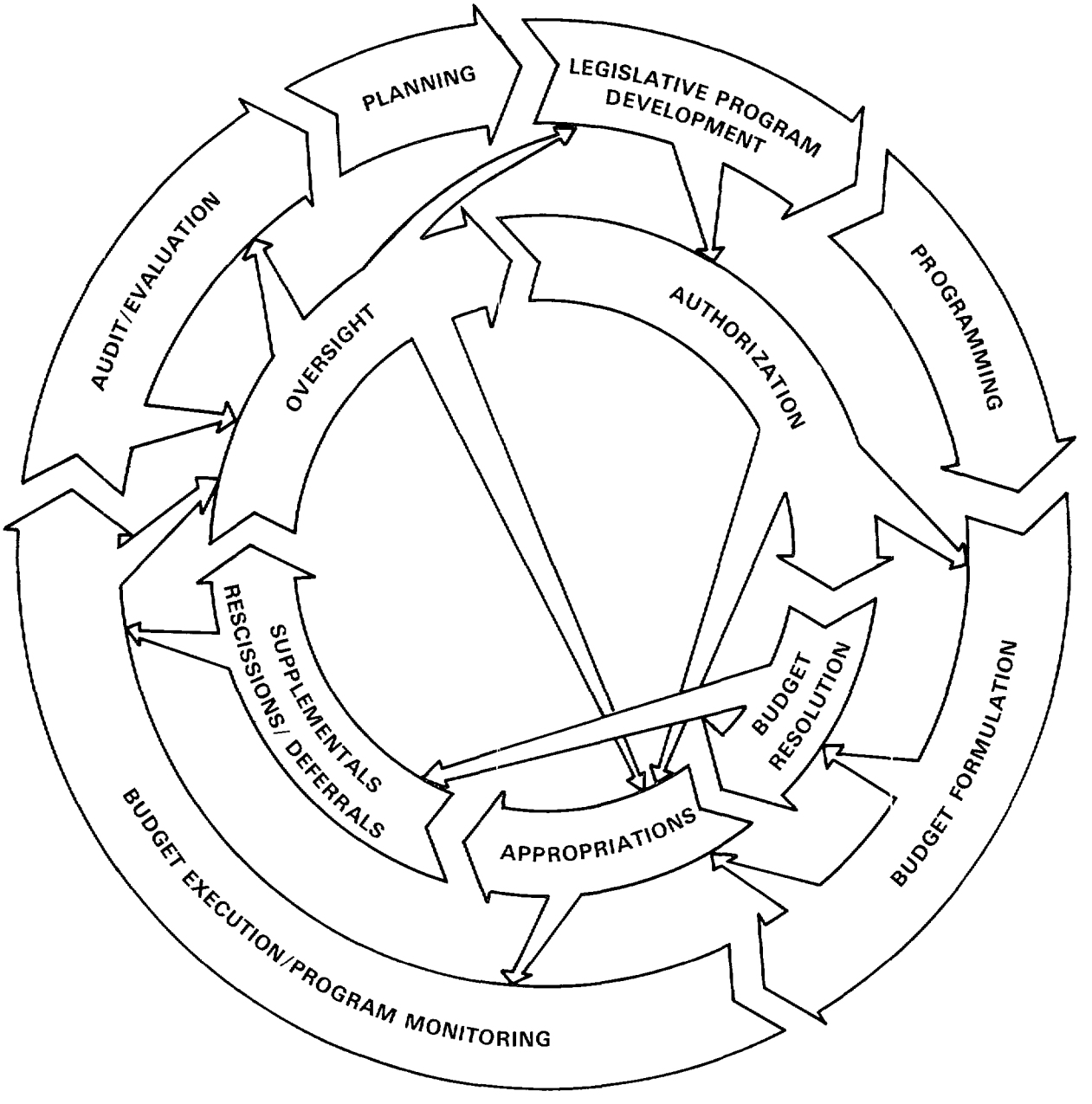

Figure 3

CENTRAL AGENCY PROCESSES AND LINKAGES: ROLES AND RESPONSIBILITIES

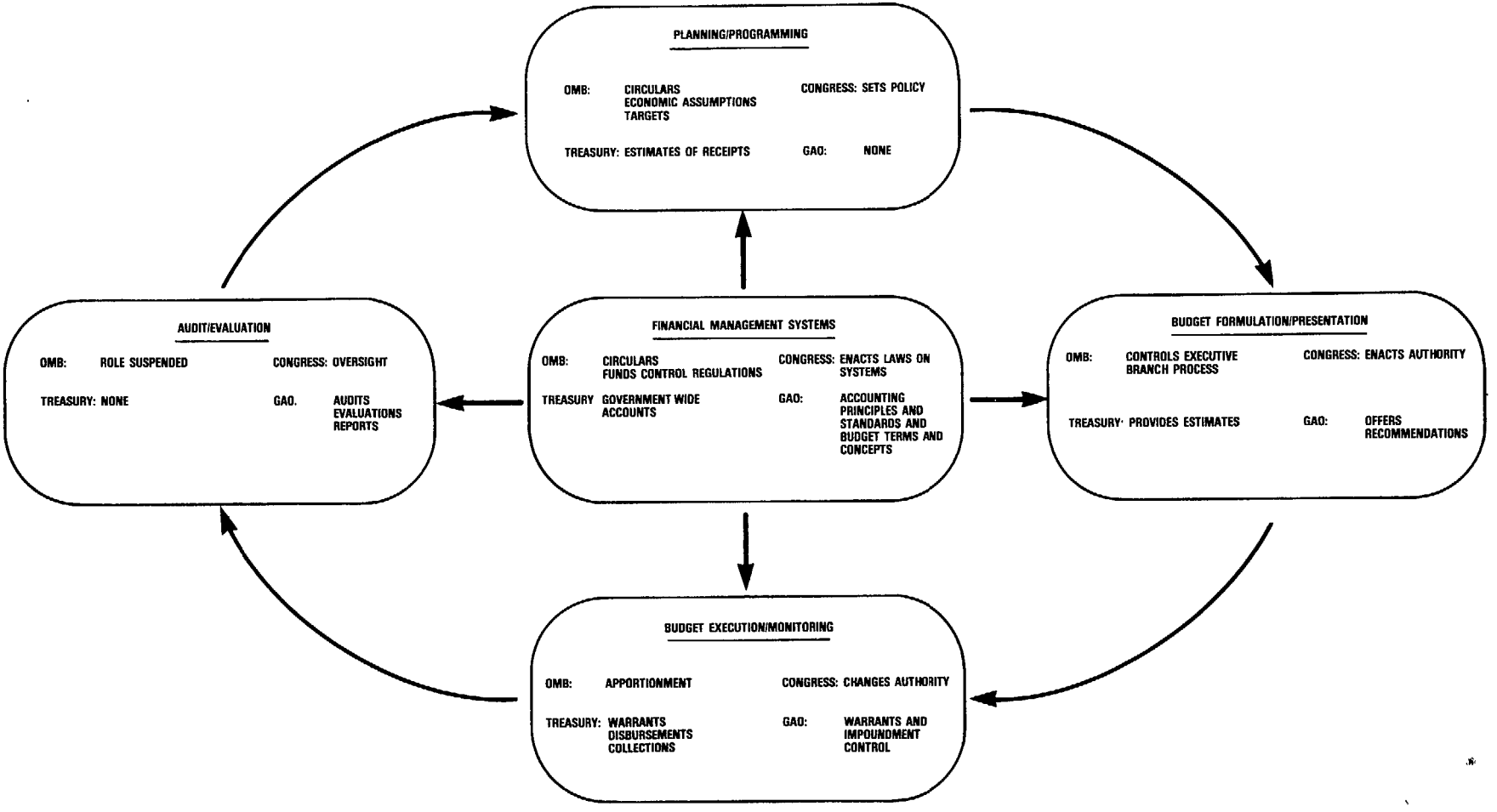

PPBS and national security policy

To fully appreciate PPBS it is important to understand its relationship to the universe of political objectives and doctrines. A recent study by the Institute for Defense Analyses (IDA) entitled "The Relationship of Military Posture to National Policy" offers some germane and clearly expressed insight into that larger context of policy and doctrine.

The perspectives in figures 4 and 5 offer a comprehensive context for PPBS in terms of the perceptions and reactions to the world situation and the development of policies and plans to deal with those perceptions. The schematic portrays the interactions and interdependencies of national organizations and their interests in the national security policy and force development process. What emerges from this overview of the process is that these relationships are complex and highly dynamic. Specified, sequential, and cyclical events occur within the national security framework whereby policy assessments precede the development of plans and programs that, in turn, lead to force development and deployment.

However, as the study points out, all the elements of the process interact non-sequentially and non-cyclically and provide both forward and retrospective effects on the process. A further observation is that the overall system is both cooperative and competitive and therefore entails accommodation of conflicting views and compromises resulting from often overlapping, and sometimes ambiguous responsibilities and roles. Of particular significance to the present study of PPBS is a realization that these observations are reasonable approximations of the national security policy and planning environment and therefore provide a necessary framework for approaching PPBS in DOD. In chapter 2 we discuss these and other factors that influence the context of PPBS decisionmaking.

Figure 4

ELEMENTAL POLICY GUIDANCE/FORCE DEVELOPMENT PROCESS

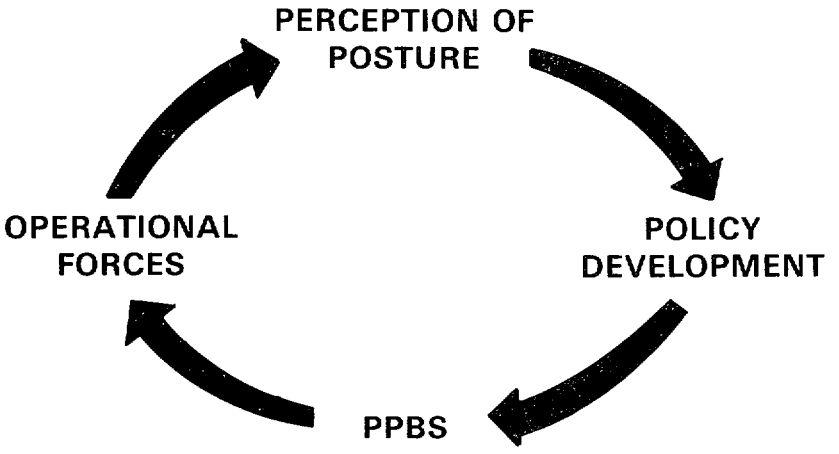

Courtesy of the Institute for Defense Analyses

Figure 5

SPHERES OF INFLUENCE WITHIN THE POLICY GUIDANCE/FORCE DEVELOPMENT PROCESS

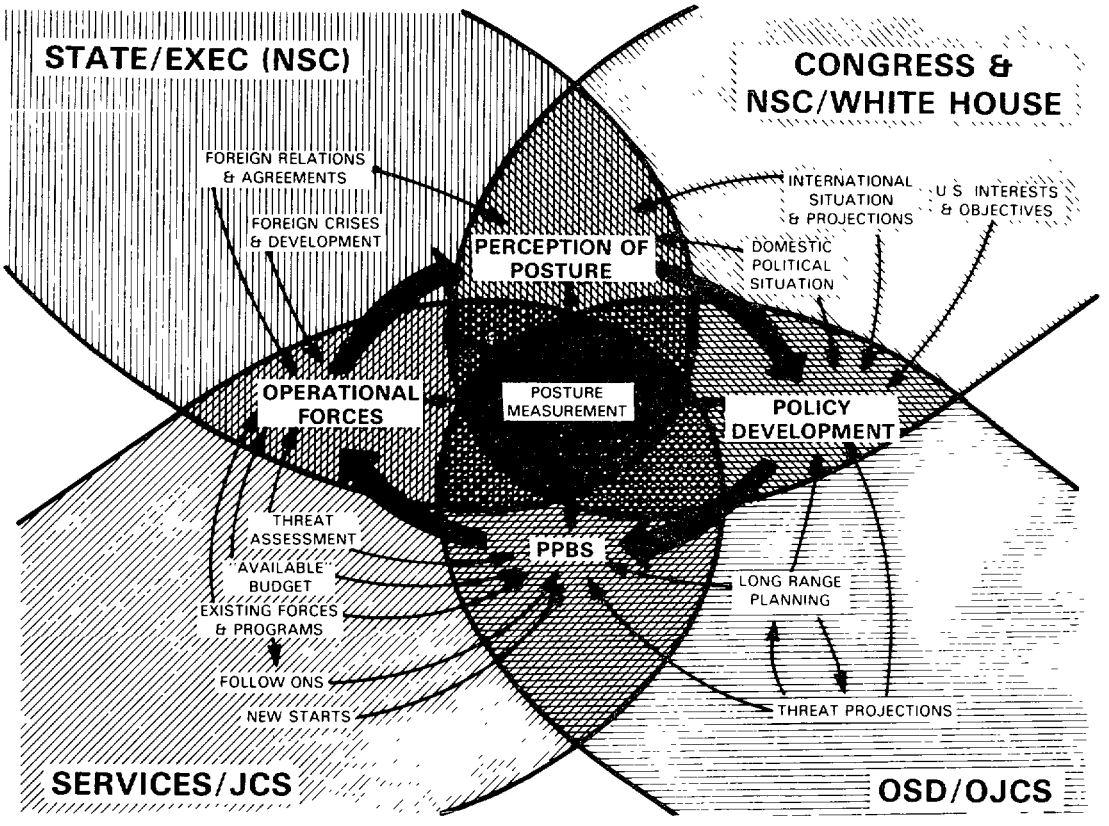

Courtesy of the Institute for Defense Analyses

CHAPTER 2: DESCRIPTION OF THE PROCESS AND THE ENVIRONMENT

THE PPBS PROCESS TODAY

PPBS is DOD's formal process for making resource allocation decisions. It has been in a state of constant evolution since its introduction into DOD in 1961. The current process (i.e., that used to develop the 1985-89 Defense program, and 1985 budget) is shown in figure 6. Briefly, PPBS begins with the joint planning activities of the JCS and the OSD staffs. Other important participants are the intelligence agencies, the NSC, and the services. The issuance of the DG is the end of the planning phase and the beginning of the programming phase of PPBS. The DG contains goals and objectives for the military departments and defense agencies in developing their POMs, or 5 year programs. The POMs are reviewed by OSD and discussed with the military departments. Major issues are reviewed by the Defense Resources Board (DRB). The results of this review, including any changes required in the POMs, are conveyed in the Program Decision Memorandum (PDM) issued by the Secretary of Defense (SECDEF). This marks the end of the programming phase and provides the program and fiscal basis for the budgeting phase. The budget for the first year of the approved 5-year program is developed by the services and submitted for review and approval by the SECDEF, OMB, and the President. The budget is then submitted to the Congress, which reviews and adjusts the budget request. Execution of the budget as approved and passed by Congress completes the PPBS process.

Although PPBS is a single process, the military services accomplish each phase with different methodologies, procedures, and participants. To achieve a common understanding within the Working Group of the similarities and differences, flow charts were developed that reflect timing, major events, documents, and levels of participation of each phase of PPBS in each of the services and OSD. These have been reviewed by the appropriate offices in the services and OSD, and are included, with narrative descriptions, in appendix II.

Many other activities and considerations in DOD affect the resource decisionmaking in PPBS. These include such overall functions as manpower, logistics, and acquisition management as well as the influence of international security and industrial mobilization plans and policies.

Figure 6

FORMAL PPBS AT DOD

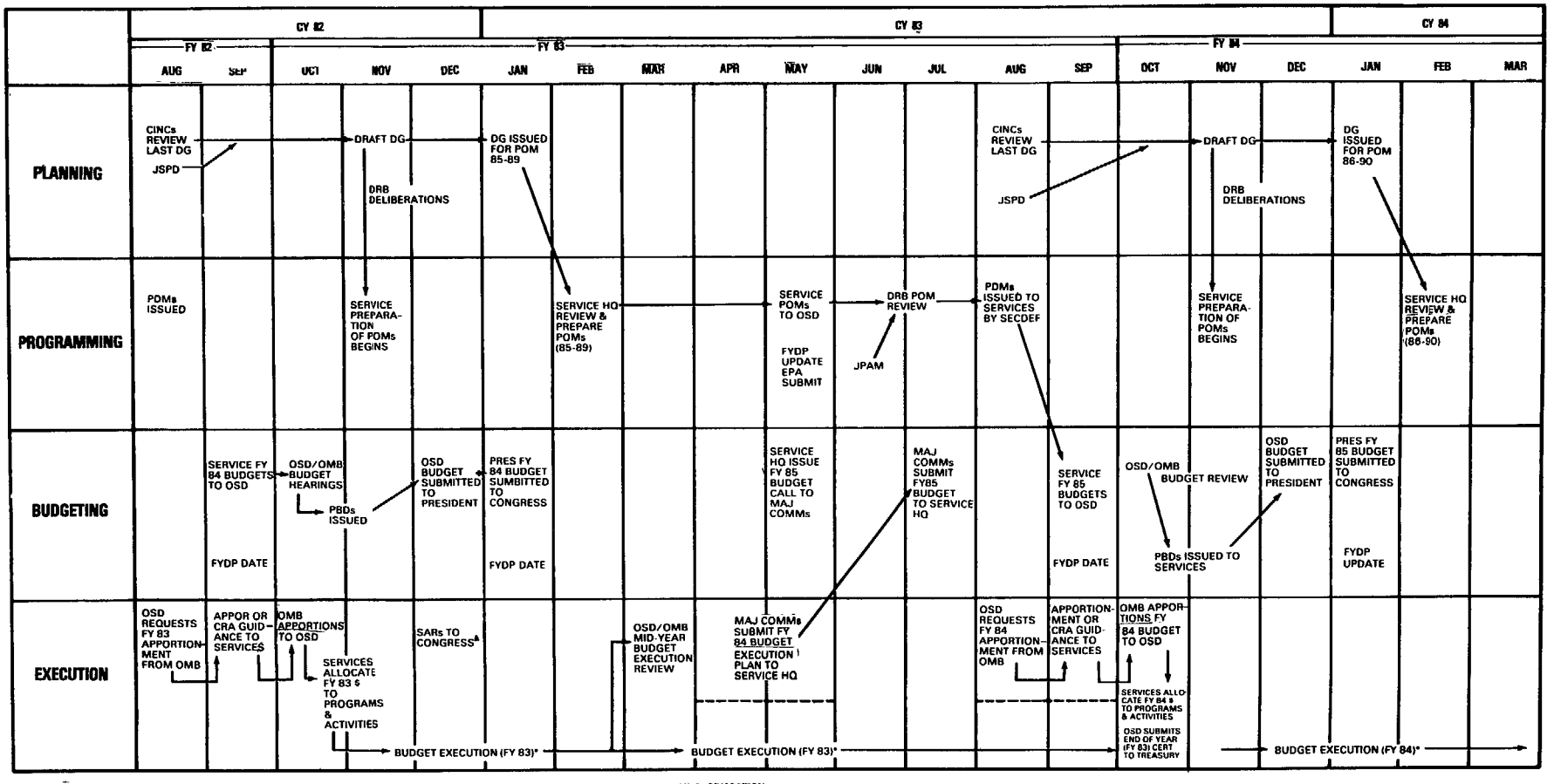

* THROUGHOUT THE FISCAL YEAR, OSD & OMB MONITOR REPROGRAMMINGS AND TRANSFERS. EVERY MONTH, SERVICE HQs SEND FLASH & OBLIGATION STATUS REPORTS TO OSD

△ SYSTEM ACQUISITION REPORTS ARE SENT TO CONGRESS EVERY QUARTER

NOTE: SEE APPENDIX III FOR ABBREVIATIONS AND ACRONYMS.

- Although these areas have substantial implications for the workings of PPBS, they are beyond the scope of the study except for the necessity to understand those implications.

Briefly then, PPBS is the framework for the resource allocation decision process that is driven by the plans, programs, and budget decisions made by DOD management, the President, and the Congress. It is not designed or intended to supplant or override the organizational and functional management responsibilities and structure of DOD.

The PPBS concept in DOD

PPBS was conceived as a way of making budgetary decisions. Traditionally, budgeting focused on such things as salaries, overhead, and capital expenditures but not on the objectives, or results, to be achieved with those resources. Therefore, PPBS was introduced in DOD so that resources for national defense could be allocated in a way that related more directly to the mission and role of the Department. DOD personnel with whom the Working Group met repeatedly stressed that the cornerstone of PPBS is the identification of the war fighting capabilities needed to meet the threat posed to U.S. security interests. The enormous energies devoted to resource allocation in DOD have as their end purpose and goal the development of the war fighting capabilities necessary to deter war, and, if deterrence fails, to prevail.

The following description of the major analytical elements of PPBS for DOD flows from these fundamental precepts. It assumes that the resources available to DOD are never sufficient to assure minimal military risk to worldwide U.S. interests. Thus, this conceptual description of PPBS is of a system whose focus is the allocation of limited resources in a way that reduces the military risk to U.S. national security interests. For all the reasons discussed in the "environmental realities" section, later in this chapter, PPBS in operation cannot be the smooth, wholly rational process described here. With those assumptions and caveats in mind, the major steps for PPBS are as follows:

1. National security policy is developed from a mixture of many diverse elements--e.g., foreign policy, international treaties and obligations, and the nation's economic and political interests. From the specification of these commitments and interests, and their relative importance to the nation, flow the near-, mid-, and long-term goals and objectives of national security policy.

2. Generally concurrent in practice, but analytically distinct, is the identification and assessment of the specific challenges--political, economic, and military--to those national goals and objectives. DOD is a major participant in defining the military threat to these goals and objectives.

3. DOD has primary responsibility for developing a strategy to achieve the near-, mid-, and long-term military goals and objectives of national security policy. (Here, DOD's own use of near-term [0-2 years], mid-term [3-10 years], and long-term [10-20 years] is adopted.) This strategy is rooted in an assessment of the acceptable risk, coupled with a realistic estimate of the resources likely to be available to DOD during various time periods, but especially in the next 5 years. Also considered, of course, would be the contribution our allies could be expected to make in achieving the strategy.

4. Once the strategy is determined, DOD can assess the capability of current resources to carry it out. This would include identifying the capabilities lacking in current resources and forces and the gaps and overlaps in service capabilities.

5. Near-, mid-, and long-term objectives for reducing the gulf between current capabilities and those needed can now be identified, including the relative importance of resources devoted to operations versus investment. These decisions would also identify the roles and responsibilities of the services in achieving the capability desired--additional tons of sealift and airlift, additional capability to protect sea lanes using both land and sea-based forces, etc.

6. OSD and JCS (through the DG) issue guidance to the services for preparing their 5-year programs, including areas of any overlap and/or gaps in capability to be addressed. The issuance of this guidance marks the end of the planning phase and the beginning of the programming phase. This guidance would include the maximum fiscal resources the services can expect to have available to achieve the program objectives contained in the guidance.

7. The service's 5-year program submissions (POM's) are reviewed by OSD for success in meeting the guidance and enhancing overall military capability. As a result of this review, the SECDEF issues directions to the military departments and agencies for adjusting their programs, if and as necessary. Any redundancies, overlaps, and/or gaps in capability that remain as a result of program review should be the result of conscious choice to balance risk and cost.

8. Attention now shifts to the budgeting phase of PPBS and the first year of the approved 5-year programs. Programs are translated into "input," or appropriations, categories (i.e., personnel; operations and maintenance; research, development, test, and evaluation; etc.), and the first year's programs are reviewed to assure that they are accurately priced and executable. Where programs have been overpriced, or cannot be fully executed in the budget year, funds are either reassigned to programs whose costs have been underpriced or used to purchase additional quantities of some high priority items. If budget review reveals that more programs have been underpriced than over-priced, more difficult questions face decisionmakers.

9. After the President's final review, the properly balanced and priced first year of the 5-year programs, in the form of a proposed budget, is presented to the Congress for its consideration.

The concept of PPBS as originally conceived and implemented at DOD ends with the presentation of the budget to the Congress. Systematic programmatic feedback from program and budget execution to subsequent planning and programming cycles was not originally built into the PPBS concept. Budgets were and are prepared, presented to and reviewed by the Congress, and executed in appropriations or "input" terms. Recognition of the importance of programmatic information and evaluation for use in future PPBS cycles has resulted in efforts to improve the programmatic content of information flowing from budget execution into future cycles. This topic is discussed in more detail in chapter 3.

A BRIEF HISTORY OF PPBS IN DOD[3]

The concept of program budgeting, as applied to DOD, was developed at The Rand Corporation in the 1950s. Before Secretary of Defense Robert McNamara introduced the concept in 1961, the individual military departments had prepared their budgets following their individual interests with relatively little guidance. The involvement of the SECDEF was largely limited to dividing DOD's budget ceiling among the military departments and reducing the departments' budgets, if they exceeded their share of the pie. This was

---

[3]This section on the history of PPBS during the McNamara and Laird years is drawn from the Lawrence Korb article, "The Budget Process in the Department of Defense, 1947 to 1977: The Strengths and Weaknesses of Three Systems," Public Administration Review, July/August 1977, pp. 334-346.

usually accomplished through across-the-board cuts. There was both little attempt and little ability within the Office of the SECDEF to review the programmatic aspects of the military department's budget submissions.

This early approach to budgeting had the following weaknesses:

--Budget decisions were largely independent of plans,

--There was duplication of effort among the services in various areas,

--Service budgets were prepared largely independent of one another with little balancing across services,

--Services felt they were entitled to their fixed share of the budget regardless of the effectiveness of their programs or overall defense needs,

--The budget process focused almost exclusively on the next budget year, though current decisions had considerable consequences for future years, and

--There was little analytical basis on which the Secretary could either make choices among competing service proposals or assess the need for duplication in service programs.

The early years

Robert McNamara entered office as SECDEF determined to be an active participant in preparing DOD's budget and choosing the weapons developed and purchased by the military departments. He saw the budget process as his vehicle for achieving this. From The Rand Corporation, McNamara recruited two of the key architects of PPBS for defense and installed them in the Pentagon. PPBS not only offered a way for McNamara to gain the control he desired over DOD, but also addressed each of the previously described weaknesses of the existing budget system.

The budget process was divided into the three now-familiar phases: planning, programming, and budgeting. The planning phase theoretically would provide an integrated multi-year overview to guide the development of programs in the programming phase. The programming phase would have a multi-year perspective, and the budgeting phase would be limited to pricing accurately the first year of the programs chosen in the programming phase. To provide the analytical component necessary to assess alternatives and review service programs, McNamara created an Office of Systems Analysis (OSA), with a staff of civilian analysts, that could independently assess service program and budget requests.

To provide the programmatic and multi-year focus, which is the heart of PPBS, the FYDP was created. This was and is the central data base underlying PPBS. It divided all DOD's budget into the 10 major force programs[4] that still form the structure of the FYDP. These programs were, and are, simply aggregations of their individual building blocks, or Program Elements (PEs).

PEs are the basic elements of DOD's budget--e.g., planes, tanks, helicopters, buildings, and Army divisions. Each PE and its associated resources can be displayed in a matrix. For each year, along one axis is the number of units for the 5 years of the FYDP, and along the other is the costs and other resources (e.g., personnel) expressed in the individual appropriations categories used in the budgeting phase (e.g., military personnel [including ceilings or "end strengths"], operations and maintenance, procurement, etc.). Thus, the FYDP serves as the fundamental cross-walk between the program structure used in the programming phase of PPBS and the appropriations structure used in the budgeting phase.

During these early years, program and budget decisions were largely divorced from the results of the formal planning phase, which remained the responsibility of the JCS. The JCS planning documents were considered to be unrealistic and lacking in analytical rigor. Consequently, in practice the planning and programming phases were essentially combined in the memoranda the OSA prepared on each of the 10 major force programs of the FYDP. These memoranda analyzed alternative force and program choices, along with the rationale for the preferred choice. After review by the SECDEF, these memoranda became the basis for both issuing guidance to the services and assessing the services' change requests. The services submitted around 300 change requests annually, but few were approved.

The programming phase ended in August, and budget guidance was issued in September. Using the original OSA memoranda on the 10 major force programs, and any changes approved, the services were asked to price out the first year of the 5-year program. There were no budget ceilings provided; the services were to price out what they needed, based on the approved program, regardless of cost. The usual result was service budget requests whose combined total

---

[4]Strategic Forces; General Purpose Forces; Intelligence and Communications; Airlift and Sealift; Guard and Reserve Forces; Research and Development; Central Supply and Maintenance; Training, Medical, Other General Personnel Activities; Administration and Associated Activities; and Support of Other Nations.

considerably exceeded DOD's "top-line," which was no less real even though it was not formally acknowledged. This difference between the services' budget requests (submitted about October 1) and the total funds available to the DOD provided the SECDEF with considerable latitude in determining the composition of DOD's budget, by choosing which weapons or other programs were included in or excluded from the budget.

The evolution of PPBS

Probably no SECDEF since McNamara has sought to exercise the degree of detailed control over the defense program and budget that he did. Since its inception, PPBS has been in a constant state of evolution. It has had to serve secretaries whose management philosophy and style favored centralized control and direction as well as those who preferred a more decentralized approach. However, the basic elements of the system--three phases, program and budget guidance to the services from the Secretary, OSD review of the service program and budget proposals, and the use of quantitative analysis to choose among competing programs--have remained.

Once the services realized that PPBS was not a passing fad, they began to improve their analytical capabilities to support their program choices and respond to the inquiries of OSD analysts. Some of the services have more readily than others embraced the analytical methods introduced by PPBS. However, all of the services apparently have far more analytical talent, and quantitative tools, to support program and budget decisionmaking than currently exist in much of the rest of the government.

The first major change in PPBS occurred under Melvin Laird, who became SECDEF in 1969. The OSA no longer put forward independent program proposals of its own but reviewed those put forward by the services using specific budgetary ceilings. The imposition of budget ceilings for the programming phase of PPBS has become a permanent feature of the system. Having the services propose programs, rather than reacting or responding to programs suggested by OSD, has become the norm as well. The type of review by OSD, primarily the degree of detail in which the service proposals are reviewed, varies with the management style and preference of the SECDEF.

The type of programmatic guidance provided to the services for use in preparing their 5-year programs has also varied over the years. Again, the differences have been centered primarily around the degree of specificity contained in the guidance, and thus the degree of central control exercised by OSD over the programming process.

During the Carter administration, Zero Based Budgeting (ZBB) was instituted with limited success. The goal of ZBB was to more clearly identify marginal programs. With its array of decision packages at three different "bands," or resource levels, ZBB was viewed by some as being little more than a technique for providing the SECDEF and OSD with greater opportunity for altering service program proposals.

In 1979, the "Rice Study"[5] of PPBS led to the DRB being formed. Consisting of the various Under Secretaries and Assistant Secretaries in OSD, plus the Chairman of the JCS, the board worked to identify those major issues in program review deserving of the Secretary's attention. The board itself was to resolve lesser issues.

The Reagan administration has broadened the board's membership to include the service secretaries, with the belief that the service viewpoints were important and useful and that fewer decisions would be appealed if the services were represented on the board that debated the issues. The operational experience of the Commanders-in-Chief of the Unified and Specified Commands (CINCs) has been brought to bear through briefings they provide to the DRB on the prior year's DG, the first complete draft of the new DG, and their views on the service program proposals.

Thus, DOD's resource allocation process has undergone rather dramatic change since 1961. It is very difficult for any single individual to change congressional processes as quickly and dramatically as McNamara changed the budget process in DOD. As a collegial, rather than hierarchial, organization, the Congress changes slowly and through consensus.

Nevertheless, congressional review of DOD's budget has changed in notable ways since 1961. More of DOD's budget is now subject to annual authorization. The Congress now authorizes not only almost all of the investment funds for DOD (e.g., procurement, research and development, etc.), but the operating accounts as well. While the Congress reviews the DOD budget to a large degree in "output" terms, its authorizations and appropriations remain primarily input oriented.

Perhaps the most dramatic change has been in the congressional budget process itself. Before the Congressional Budget and Impoundment Control Act

---

[5]Defense Resource Management Study: Final Report, Donald B. Rice, Study Director, The Rand Corporation, 1979.

of 1974, there was no formal congressional budgetary process. The total federal budget approved by the Congress was simply the sum of budget authority enacted or existing in permanent statutes. The deficit was the difference between the approved level of spending and the revenue resulting from tax decisions, which were made separately. Under the process established by the 1974 act, the Congress must face annually the fiscal consequences of its actions. The process requires explicit decisions about the amount of the federal budget that will be devoted to various governmental functions, including national defense. Thus, the total funds provided to DOD are debated within the larger context of the entire federal budget.

It is clear that the process by which both DOD and the Congress each consider and then determine the resources needed for national defense has changed considerably since 1961. Chapter 4 contains a discussion of the implications for both DOD and the Congress of further changes in the ways in which DOD presents its budget to the Congress and the Congress reviews and acts on that budget.

ENVIRONMENTAL REALITIES

In reviewing PPBS, it is useful to understand not only the concept, its purpose, and its evolution in DOD, but also the total context in which it must operate. On page 15 of this chapter it was mentioned that PPBS is not designed to be the total management structure for DOD. Functional management systems for such areas as manpower and acquisition management are equally important to the effective management of DOD. However, all of these systems affect, and are affected by, PPBS and must interact with it to some degree. The allocation of resources is inextricably linked with policymaking, and because PPBS is the central resource allocation system in DOD it affects all functions within DOD.

Because PPBS must function in a broader political, economic, and management environment, various factors weigh heavily on DOD's resource decisionmaking. These involve such areas as national economic conditions, congressional budget procedures, the use of committees as key PPBS decisionmakers, political and demographic pressures, the reality that administrations change, and an area unique to DOD--the division and convergence of responsibility for policymaking and management between the military and civilian leadership in DOD. Because PPBS must accommodate these environmental factors, they are discussed here in brief, but were not addressed as PPBS-related problems.

National economic conditions

While in theory resource allocations to defense should be primarily a function of the threat, as a practical matter, economic realities constrain that allocation in times of peace. The relative health of the economy, the rate of inflation or deflation, and the condition of the defense industrial base all help determine the amount of resources the nation's leadership will devote to defense.

The overall economic health of the nation, the type of competing demands for national resources, and the contribution to or drain on the economy of various levels of defense spending are important constraints on the military budget--especially in a democracy with shared legislative and executive powers.

National economic considerations are essentially political and policy judgments by the President and the Congress that determine the amount of resources available to the federal government. Just as the military departments compete for their share of total defense resources, so must DOD compete for its share of total federal resources.

International treaties and commitments

National defense planning and resource allocation are influenced by international factors. Significant constraints and needs are represented by the military, political, and economic interests and commitments of the United States, as represented by various treaties and agreements between the United States and other nations. These same treaties and agreements help define the contribution our allies can be expected to make to protect shared interests against a common threat.

Thus, America's worldwide interests and commitments are a fundamental part of the environment in which PPBS operates, and indeed they provide the very basis for determining the type of threats that challenge those interests and commitments. The definition of the threat against U.S. interests, of course, is the starting point for all defense planning and subsequent events in PPBS.

Congressional, regional, and constituent concerns

The very importance and breadth of DOD's operations carried out throughout the country mean that a very large number of representatives, including many not on the authorization and appropriation committees for DOD,

will be concerned with DOD's spending proposals and their implications for regions and constituents. A major responsibility of any member of Congress is to represent the needs and concerns of his/her geographic areas and constituents, balancing these with the broader interests of the nation.

These congressional concerns and the needs of national defense as seen by the executive branch periodically conflict. The Congress may, and does, require DOD to spend money on weapons systems and operations (e.g., bases) that DOD has not requested. Thus, congressional concerns and wishes must be considered early in the programming and budgeting phases of PPBS. From the services' viewpoint, it is better to anticipate and accommodate congressional desires in building their programs than have the Congress adjust those programs later to reflect congressional priorities and concern.

The appropriation acts for DOD always contain a variety of general and specific provisions for executing programs and the budget, as well as directives for studies and analyses to be provided for later congressional consideration. The necessity of maintaining an ability to respond to these provisions and directives has implications for the design and operation of PPBS.

Late appropriations

In recent years, it has become the norm, rather than the exception, for the DOD to begin the fiscal year without annual appropriations. This requires operating part of the year on a continuing resolution, which generally does not provide as much funding as the appropriation acts. As a result, budget execution is complicated, as some projects must be postponed, accommodations made to others, and flexibility maintained to enable adjusting to the final decision. When a continuing resolution extends for a full quarter or more, it becomes necessary to squeeze budget execution into a 4- or 5-month period. Finally, the lack of appropriations at the beginning of the fiscal year adds to the uncertainty and work intensiveness of preparing the next year's budget and 5-year program for the next PPBS cycle, since the baseline for decisions--the current year's budget--remains in doubt. Late appropriations thereby complicate the efficient and orderly execution of programs and budgets, and magnify the work intensity of PPBS.

Successive administrations

PPBS must be sufficiently flexible in design and operation to accommodate the different managerial philosophies and objectives of successive secretaries and administrations.

Historically, management of DOD has swung between a rather highly centralized decisionmaking process and one that is more participatory and decentralized, with increased delegation to the military departments. These swings have basically coincided with changes in presidential administrations.

Decentralized and centralized management systems call for different types of resource and management information, primarily reflecting the degree of detail required by top policymakers. The information systems of PPBS, and those upon which it draws, must be able to support either style of decisionmaking.

Service competition for resources

DOD comprises four military services with different, yet complementary, missions and functions. Since funds are never sufficient to meet all perceived needs, each service must compete for its share of the total DOD budget. This competition among the services for finite resources is a fundamental feature of resource allocation in DOD. From that competition can spring much of the innovation and drive toward efficiency that is essential to getting the largest return on national investments in defense. The challenge of PPBS is to channel, and use, that competition without either allowing it to get out of control or stifling it and, thus, inhibiting innovation and the benefit of increased efficiency.

The very essence of OSD's responsibilities is to provide guidance to the services when they are making their own resource allocation decisions and to review service program and budget requests to ensure that they have complied with the guidance. Central to this review function is assuring that each service has allocated sufficient funds for the various support functions it provides to the other services (e.g., sealift, airlift, and ground-based air defense) and that the final DOD program provides a balanced, cost-effective force mix to meet the perceived threat.

Similarly, the JCS' major responsibility is to review and integrate the services' operational plans and to provide unified military advice to the President and the SECDEF. The differing, and often competing, perspectives, needs, and responsibilities of the services, OSD, and JCS must be clearly understood in assessing PPBS and recommending system modification.

Personnel turnover

DOD, in common with other cabinet departments, has regular, rather rapid turnover of its top civilian policymakers, particularly Presidential appointees. John Collins, in his 1982 book, U.S. Defense Planning: A Critique, calculated the average tenure at about 3 years. In addition, the military services rotate their career military personnel regularly. This turnover in both top civilian and career military personnel places a premium on the continuity of civil servants and military personnel whose careers follow a particular specialty. These individuals provide analysis, advice, and institutional memory that are not otherwise available.

While some services have career paths that allow their personnel to develop considerable expertise in PPBS, others regularly rotate officers between combat and support positions. In addition, former JCS Chairman David Jones recently highlighted problems within the JCS that flow, in part, from rotating JCS staff to and from the individual services. Problems flow as well from the turnover in top civilian personnel. This is partially alleviated by the phenomenon of the "revolving door." Many of the personnel who occupy key appointive positions in DOD have occupied similar or related positions in past administrations of the same political party.

Nevertheless, PPBS operates in an environment in which people with important resource allocation responsibilities are not necessarily familiar with PPBS, its procedures, and its requirements. Thus, PPBS information and procedures must be able to accommodate a wide variety of experience and knowledge among the participants.

Decisionmaking by committee

Key PPBS decisions are made, in large part, by various committees within DOD as a whole (e.g., DRB) and the military departments (e.g., Chief of Naval Operations' Executive Board, Army's Select Committee, and Air Force's Council). Most of these committees neither keep minutes of their meetings nor provide written rationale for their decisions, which may be circulated widely.

This feature of PPBS decisionmaking has been much discussed and debated. Its defenders say that making decisions by committee allows a wide range of views to be considered in reaching important decisions, and provides a sense of participation in and commitment to the decisions reached. The lack of minutes of meetings encourages and permits a frank exchange of views, permitting participants to provide their best judgment without the necessity

to speak "for the record." Critics say that the lack of minutes obscures the rationale for the decisions reached; that reliance on committees spreads responsibility, making it difficult to hold anyone accountable; and that it fails to provide a record of decisionmaking for later assessment and review. The various virtues and drawbacks of decisionmaking by committee in PPBS should be understood and kept in mind as one reviews the system. But, given the complexity of the PPBS information review and integration task, the existence of committees appears necessary. Thus, the fact of decisionmaking by committee and its implications (both strengths and weaknesses) are considered environmental factors in this study.

Civilian-military responsibilities for national security

PPBS can be viewed within the context of the interaction of the two major responsibilities of DOD--(1) setting national defense policy and choosing resources to enhance the military capability to protect U.S. interests in the future and (2) preparing war plans and maintaining operational forces that provide maximum military capability with the resources on hand today. Civilians within DOD play a much larger role in the first arena, while the second is primarily the province of the military, particularly the JCS and the Unified and Specified Commanders.

Civilian control of the military is a fundamental principle of the Republic. The Constitution of the United States designates the President as the Commander-in-Chief of the armed forces (Article II, Section II), and vests in the Congress (Article I, Section VIII) the power to declare war, to raise and support armies, to provide and maintain a navy, and to make rules for the government and regulation of the land and naval forces.

The organizational implications of this principle are reflected in the flow of operational control through the SECDEF to the JCS and in the continuing review and resource control of the SECDEF and the military department secretaries. These implications also are reflected in the role of the various staff and organizational elements in the PPBS.

The proper balance between civilian and military personnel in national security policy has been the subject of much study and debate. It is not our purpose here to join that debate. However, differences in management approach among secretaries of defense and the degree and type of control they try to exercise in PPBS, and DOD generally, reflect differing underlying philosophies about the role of civilians in DOD.

It is important to recognize that the dual responsibilities of DOD, mentioned at the beginning of this section, have implications for PPBS, since it of necessity intersects both. PPBS is the central process within DOD for determining how additional resources shall be used to reduce the military risk to U.S. national security policies and objectives. To do this, PPBS must draw on the operational experience of the military to determine both the capability of today's forces and the military risk associated with the programmed forces. Cooperation between the military and civilian personnel is necessary for PPBS, and DOD as a whole, to be effective.

At the broadest levels of national security policymaking, the civilian leadership of the nation--in DOD, the Department of State, NSC, the Central Intelligence Agency, the Congress, and the President--determines the overall national security interests, goals, and objectives. The military leadership of the country assesses the military threat to these interests, goals, and objectives. It is the final responsibility of the civilian leadership to determine the total resources that will be devoted to national defense, of the military to provide advice on both what the total should be and the risk attached to the resource level chosen, and of the civilians to determine the degree of risk that is acceptable.

The degree of civilian control is greatest at the policy level and lowest at the operational level. These two levels, and an intermediate control level, are shown in figure 7. It is essentially the responsibility of the military to train and operate the military forces necessary to protect national security interests. Similarly, the civilian leadership has primary responsibility for establishing national security policy and resource levels. Responsibilities are less clearly demarcated at the intermediate control level.

There is considerable interaction and sharing of responsibilities between civilian and military personnel in both the preparation and review of the service programs and budgets. The various service headquarters staffs contain civilian analysts who advise and assist the military officers who have lead responsibility for preparing the service 5-year programs. But the preparation of the POMs remains primarily a military responsibility. The OSD offices that review the service programs are composed primarily of civilian staff, but they contain service personnel on rotation from their services for a period of 2 to 3 years.

Figure 7

KEY ELEMENTS OF DEFENSE MANAGEMENT

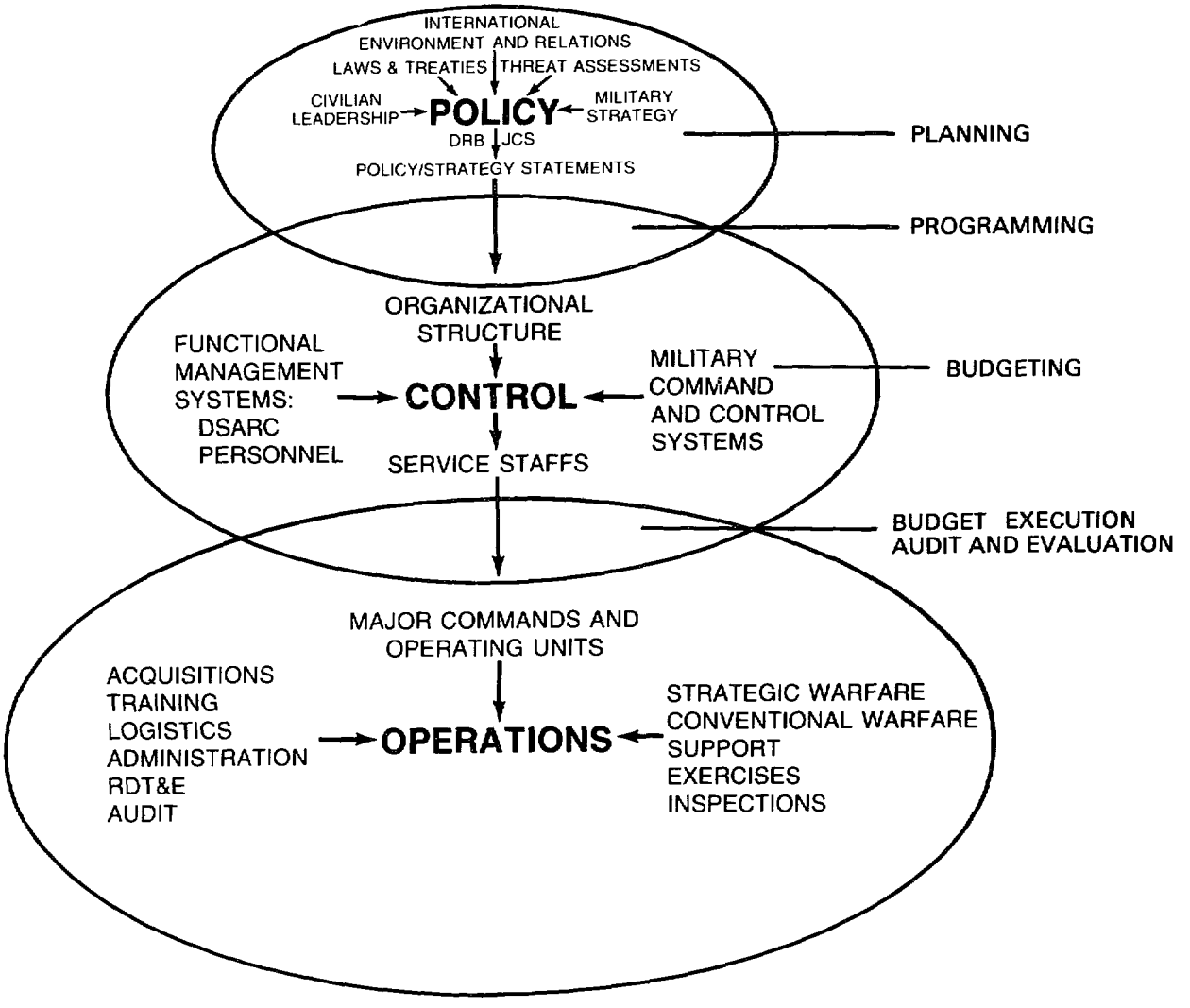

Since, as Robert McNamara so clearly demonstrated, the Secretary can best exert his influence on DOD through the budget process, it is natural that PPBS will be affected most directly as administrations, and management philosophies, change. Thus, the degree of OSD control of PPBS is, in part, a natural reflection of beliefs regarding proper civilian-military balance in defense policymaking.

SUMMARY

This chapter briefly describes the evolution of PPBS in DOD since 1961; how it works today; its basic concepts as related to DOD; and some of the political, economic, and institutional forces that influence its operation. PPBS operates in an ever-changing, often uncertain, environment and must be flexible enough to adjust as circumstances require.

CHAPTER 3: AREAS OF POTENTIAL IMPROVEMENT OF PPBS

SECTION 1: PLANNING, ITS LINKAGE WITH PROGRAMMING, AND CROSS-SERVICE ANALYSIS

As mentioned in chapter 1, a consolidated set of nine problem areas was agreed upon by the Working Group. In this chapter, each of these is addressed in turn: a brief statement of the study area is followed by a summary of reasons for its selection for study; the results of the review by the Working Group; and a statement and discussion of alternatives for addressing any identified problems, with pros and cons for each alternative.

STATEMENT OF THE STUDY AREA

This area concerns the planning of alternative policy, strategy, force structure, and resource allocations within DOD, including the linkages between this planning and the national military strategy, linkages to the later programming phase of PPBS, and integration into a DOD-wide plan.

The linkages include interactions among the President, NSC, OSD, JCS, Commanders-in-Chief, and the military departments; their roles and functions in developing policies, analyses, and decisions conveyed in the DG; and, finally, review of the POM.

REASONS FOR STUDYING AREA

The major considerations that led the Working Group to study this issue area include clarification of the planning process, especially those areas not covered in the literature; a review of changes brought about by the Deputy Secretary for Defense in his June 1981 memorandum on "The Planning Phase of the DOD PPB System"; and, finally, the basis and processes for conducting and using cross-service analysis in the planning phase.

Planning and the linkages between the planning and programming phases of PPBS are crucial to the translation of broad national security goals and objectives into a fiscally balanced set of programs for accomplishing the goals. Historically, it has been generally perceived that the planning phase of PPBS is its weakest, or certainly its least explicit, link. Such perceptions focus on the process of converting national security objectives into the (1) strategy, (2) force level, and (3) investment plans used to guide

the military departments in developing their proposals for the POM and enabling the SECDEF to evaluate those proposals across service lines in developing DOD programs. Most administrations have recognized the complex problems involved in relating the threats and strategy to the budget. President Truman stated that "Strategy, Program and Budget are all aspects of the same basic decision."

It is the relationship among those three aspects of national security decisions that defines the essential nature of national security policy and its interaction with the planning phase of PPBS. In searching through the literature for the relationship between national policy development, goal-setting, and the PPBS process, the Working Group found that there was little formal or explicit treatment of the subject. Literature abounds on national security, its history, theory, practice, and directions. Much has also been written on PPBS in DOD. Little, however, has been written on the specific process used to make a systematic transition from one to the other in a context that is meaningful to PPBS participants and users.

From that hiatus many PPBS participants and observers have developed a perception that the planning phase of PPBS is somewhat irrelevant to the detailed process, and is therefore ineffective or weak compared to the later phases of the system. This perception has two major sources: (1) the contrast between the specificity and mass of detail characterizing the programming and budgeting phases and the paucity of detail characterizing the generality and breadth of overall defense planning; and (2) the very limited number of participants in the early planning process that spans the intersection between national policymaking and later phases of PPBS. Largely because the relationship of the PPBS planning phase to national policymaking is not well documented, many observers have assumed that such a relationship does not exist and that the planning phase of PPBS is irrelevant. The non-affordability of the resource guidance in the DG has reinforced these perceptions.

RESULTS OF WORKING GROUP REVIEW

Understanding the linkage of national security goals to DOD programs and budgets, and the policy debate over acceptable risk

In the course of the review, the Working Group observed a considerable range of opinion on the relationship between national security goals and

objectives, Defense strategy, and the notion of a "Planning Force" as they relate to the operation of PPBS, especially their role and utility in the DG. After discussions in DOD, at OMB, and with NSC staff, an overview of those relationships evolved and is presented here as a backdrop for understanding this issue area.

Fundamental to both the concept and the structure of PPBS in DOD is the principle that the Defense budget should be derived from the plans to cope with the threats to national security. PPBS is intended to provide a programming bridge from national security goals to the budget's construction. This bridge is characterized by its focus on specific military programs designed to achieve a specified force level posture within projected resources. The least explicit aspect of the bridge is from threat and strategy to force and resource guidance.

Literature on PPBS and DOD planning is replete with references to the "gap" between Defense strategy and the derived force levels, and the resources available to DOD. Some observers have regarded that as a serious flaw in the PPBS concept. The "gap" can better be described as a way for high-level planners to acknowledge that the resources available in a peacetime economy will not permit maintaining military force levels that are sufficiently large to assure a "minimum" degree of risk in meeting the projected threats. The "gap" is a measurement of the added risk above the "minimum" that results from applying constrained resources to meeting the threats.

To start the process of building programs within resource constraints, it is essential to have some baseline for assessing the implications of those constraints. The baseline is provided by estimates of the threats and the development of a strategy and force levels to deal with those threats at a minimum risk.

The DG provides this baseline and assessment of risk, and is the primary link between planning and programming in PPBS. The DG is essentially divided into three parts addressing: policy goals and objectives; programming goals and objectives; and the fiscal guidance to be used by the services in developing their 5-year programs. Chapters 1 through 3 address policy; describe threats to national security; and establish policy goals and objectives to carry out national policy. Chapters 4 and 5 identify the program objectives to be incorporated into the 5-year programs of the military services. Chapter 6 provides the fiscal guidance, or "top-line," within which the services are to develop programs to achieve these objectives. Chapter 4,

appendix I, also includes the "Planning Force"--the forces necessary to meet the threat with minimum risk. This force is taken from the Joint Strategic Planning Document (JSPD), prepared by the JCS as their input to the DG. A measure of the risk inherent in the forces provided in the program guidance of chapter 4 can be determined by comparing these forces with the Planning Force. (See figure 8.)

When the POMs are submitted, the JCS provide the final planning link by furnishing to the SECDEF, via the DRB, the Joint Program Assessment Memorandum (JPAM). The JPAM presents the JCS' views on the adequacy and capabilities of the total POM forces to execute the national strategy and on the risks inherent in those force capabilities. It is not a critique of the military department POMs but an assessment of the capabilities generated by the composite POM, as compared with the baseline of the Planning Force.

There have been many misperceptions of these overall planning concepts and the process of dealing with them in PPBS. These misperceptions have often led to a conclusion that the planning process is irrelevant to the balance of the system. For the vast majority of PPBS participants who respond to the constrained program and fiscal guidance in the DG in constructing specific proposals for the POMs and the budget, the strategy and the planning forces are indeed irrelevant. For those involved in planning at the highest level, however, the strategy and planning forces provide a backdrop for programming. Without these concepts the system would not provide a link between national goals and the Defense budget.

A related issue was evidenced 2 years ago in an "affordability gap" between the programming guidance contained in chapters 4 and 5 of the DG and the fiscal guidance (chapter 6) in the same document. This was particularly apparent in the FY 83-87 cycle when it became clear that the programming guidance was not attainable within the fiscal guidance. The SECDEF directed attention to solving that problem for the following program review. OSD, through the DG Steering Group, is now tailoring and balancing the programming guidance to be affordable within 10-15 percent of the fiscal guidance. The 10-15 percent gap is deliberately included to provide an incentive for efficiency.

The issue of perceived problems with the planning-programming linkage and possible further improvements to the understanding and functioning of PPBS will be more specifically addressed later in this section.

PLANNING, PROGRAMMING AND BUDGETING SYSTEM (PPBS)

DEFENSE GUIDANCE (DG)

- Threat assessment and opportunities
- Policy guidance
- Strategy guidance

} Fiscally unconstrained

- Force planning guidance
- Resource planning guidance
- Tentative fiscal guidance

} Fiscally constrained

- Major issues

ISSUE PAPERS/BOOKS

- Policy and risk assessment
- Nuclear forces
- Conventional forces
- Modernization and investment
- Readiness, sustainability and other logistics
- Manpower
- Intelligence
- Management initiatives

PROGRAM OBJECTIVE MEMORANDUM (POM)

- Service-proposed programs

PROGRAM DECISION MEMORANDUM (PDM)

- DOD-approved program

PRESIDENT'S BUDGET

- Government-wide

Figure 8

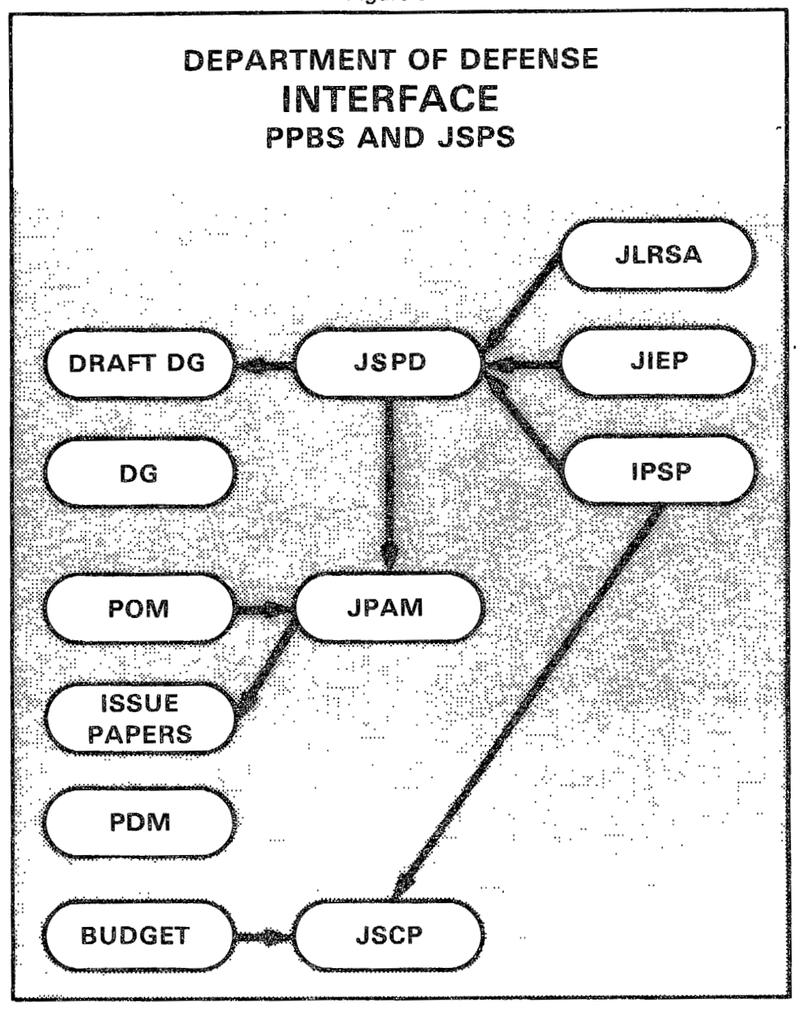

JOINT STRATEGIC CAPABILITIES PLAN (JSCP)

Volume 1: Concepts, Tasks & Planning Guidance

- National security objectives and derivative broad military objectives
- World-wide and regional military strategic concepts
- CINC-assigned tasks and types of plan required
- Planning guidance to accomplish assigned tasks
- Planning guidance to Service Chiefs in support of CINCs
- Force guidance related to operational plans

Volume 2. Forces

- In-place and augmentative forces available under various conditions of mobilization
- General planning guidance for use of forces and resources
- Service-unique and force-unique information and limitations
- Additional documentary sources

JOINT STRATEGIC PLANNING SYSTEM (JSPS)

JOINT LONG-RANGE STRATEGIC APPRAISAL (JLRSA)

- Future alternative world environments
- Regional trends and developments
- Transition from mid- to long-range planning

JOINT INTELLIGENCE ESTIMATE FOR PLANNING (JIEP)

- Threat on which to build strategy and forces
- Intelligence estimates, short- and mid-range

INTELLIGENCE PRIORITIES FOR STRATEGIC PLANNING (IPSP)

- Substantive military priorities for DOD intelligence production, collection and support activities, short- and mid-range

JOINT STRATEGIC PLANNING DOCUMENT (JSPD)

- Comprehensive military appraisal of threat world-wide
- Recommended national military objectives
- Policy appraisal and recommendations
- Summary of JCS planning force levels for last year of mid-range period, required to execute the approved national military strategy with "reasonable assurance" of success
- JCS views on attainability of those forces based on resource constraints

JOINT PROGRAM ASSESSMENT MEMORANDUM (JPAM)

- Assessment of capabilities and associated risks represented by composite POM force
- JCS (and CINCs) views on overall balance of composite POM force
- Discussion of cross-service programs and issues and a coordinated assessment of their impact on national military strategy
- JCS recommendations on actions to improve overall defense capabilities
- Capability assessment of POM mobility forces to meet deployment requirements and to meet the risks

A description of the concepts and practices that link plans and programs in PPBS

At the highest level, the planning phase is a closely held system, informal in appearance, and highly dependent on the interpersonal relationships between the President, his National Security advisors, and the SECDEF, as well as other cabinet level advisors. Through those relationships, and the policies and posture of the administration, broad guidance is provided to the SECDEF for development of the DG and related strategy, force, and resource allocation decisions. Under a cabinet form of government as currently practiced by the executive branch, the SECDEF exercises wide discretion in achieving national security goals, within policy and fiscal guidance from NSC and OMB. Program initiative therefore does not entail an elaborate mechanism for conveying specific instructions for translation of the national goals into plans and programs for DOD. It relies instead for that specificity on the SECDEF and his staff. There is a continuing dialogue with the President and other cabinet members and within the NSC forum on major events and developments bearing on defense activities, programs, and budgets, but initiative tends to remain with the SECDEF.

Resource planning for DOD is of course a major element of the national security decision process by the Chief Executive of each administration. Therefore, it is subject to whatever redirection is required to be consistent with the goals of a new administration. These changes can occur in a number of ways, and PPBS must be flexible enough to accommodate a wide range of changes. Rarely have new administrations suggested a reinvention or even major reorganization of the national defense establishment and its roles and functions. In-depth reviews of national security policy and strategy alternatives and their effect on force structure and levels have been conducted by some prior administrations; however, the historical pattern suggests that the basic need for a defense establishment is generally taken as a given. A fundamental review of such issues would call for a specific ad hoc study in a much broader context than PPBS. New administrations tend to seek changes in emphasis or priority insofar as the allocation of resources is concerned. The PPBS process can handle changes in emphasis or timing in DOD budgets, force levels, and capabilities at about the prevailing levels. However, the analytical capability at OSD and the military departments could also be used to examine trade-offs for the whole program as well as at the margin.

DOD's planning effort in PPBS and its link with the programming effort are centered on the development of the DG document by the planners and policymakers in OSD, JCS, and the military departments, consistent with the general direction and priorities of the administration. The link to these priorities is found in the general oversight and review activities of NSC and OMB during the drafting of the DG and the related strategy and force development. This is therefore a crucial link in the development of planning under PPBS.

The DG Steering Group comprises OSD, the JCS, and military departments' staffs. The DG Steering Group is the focal point for developing the DG in terms of specific scenarios, strategy, force levels, and cross-service and DOD-wide program integration, as well as resource availability. Secretary Weinberger has initiated a number of changes aimed at strengthening the planning phase of PPBS, while at the same time shifting greater responsibility for specific program and budget development to the military departments. These changes are evidenced initially in how the Steering Group constructs the DG. The Under Secretary of Defense for Policy now has the central responsibility for developing the DG document, which synthesizes functional and operational policies. Once the draft guidance has been developed and provided to the military departments and agencies for comment, it begins to serve, even at that stage, as operational guidance in the POM development process.

When the POMs are submitted, the Under Secretary of Defense for Policy evaluates the military departments' proposals for consistency of programs with the secretarial guidance provided. Another major reaction to the POM proposals comes in the JPAM, which is prepared by the JCS. These responses enter into the preparation of Program Review Books, used in the program review conducted by the DRB for the SECDEF. The issues raised in that review are generally those wherein the staff and the JCS feel that the planning guidance was not adhered to in the POM submissions. The DRB provides the SECDEF with advice on closing any gaps between planning guidance and the POM program proposals.

Summary of Working Group results

PPBS includes a developed set of procedures that have evolved over the years to produce more effective planning. However, the Working Group has identified three major areas where further evolutionary changes are needed in planning, its linkage with programming, and cross-service analysis: (1) the

sequence of defense-related decisions by incoming administrations, (2) disconnects in multi-service programs, and (3) misunderstanding of key PPBS concepts and system interdependencies. The problem statements that follow will address each of those sub-areas.

Sequence of defense-related decisions by an incoming administration

When a new President takes office in January, one of the first activities that occurs involves congressional action on the budget for the next fiscal year. The next PPBS decision-point relating to defense programs, the program review for the following cycle, does not occur until the summer. However, the underlying guidance that drives that program cycle was developed in the summer preceding the election. So it is not until late in the President's first year that the opportunity arises for a full-scale evaluation and modification of defense resource allocation to accommodate changes in strategy and policy through the formal PPBS process. This requires considerable delay before policy changes are reflected in action. In contrast, budget changes intervene in the ongoing PPBS process, and take effect early. It is natural, in light of political imperatives, for the new incumbent to take the first opportunity after his inauguration to "make his mark," which will usually mean changes to his predecessor's budget. However, the budget presents a highly fragmented structure, and changes at this level are necessarily separate "pieces" that are difficult to interpret in terms of an integrated multi-year policy. Furthermore, these relatively quick decisions, and the publicity surrounding them, tend to constrain future options and make it difficult to take a step backward and develop a coherent policy based on the "big picture."

In short, there is no obvious "right time" for a new administration to make significant near-term changes without disrupting the PPBS cycle, with its 5-year horizon. A bridge is needed to provide a convenient link between potential shifts in national policy and the internal operations of PPBS. If the President-elect could be encouraged to attach high priority to the early establishment of a coherent defense strategy, this would serve as a framework against which he could formulate and evaluate specific proposals with regard to DOD's budget. This strategy could then be refined and developed into a subsequent formal presentation to the Nation. A bridge is also needed in DOD to reflect these changes in the POM and budget cycle that is to be completed in December.

Disconnects in multi-service programs

A segment of the PPBS community perceives serious disconnects in multi-service programs, implying inadequate attention being paid to, or control being exercised over, multi-service issues. It has been difficult to identify specific examples of such disconnects. However, at the programming and budgeting level, for example, mismatches have been revealed during the review process between resources and requirements for airlift and sealift. Various initiatives have been undertaken to address these specific issues, and to some extent to address the broader problem that the system permits such disconnects. While the program and budget review necessarily surfaces such problems, it would be more efficient to minimize the number of such instances by improving the attention paid to cross-service issues at the planning stage.

These concerns are within the charter of OSD and JCS. However, the functional orientation of OSD makes it difficult for them to address this issue adequately. Also, there is resistance to JCS doing so, although "embryonic" efforts are being made.

This issue does not fit neatly into any of the Working Group study areas. To explore questions of balance and consistency across services, a common metric is necessary, similar to the "four pillars." This concern is addressed under "Structure of Information." Cross-service analysis also requires compatibility of data bases, addressed under "Management Information Systems." At the more macro-level, where the development of new multi-service equipment or the assignment of new missions is concerned, the issue becomes one of roles and responsibilities, which is outside PPBS, though necessarily linked by resource considerations.

The focus here must be upon potential changes to the planning process, or to planning-programming linkage, that would enhance the ability to address multi-service topics.[6]

---

[6]According to DOD, several significant events have transpired since the Working Group's information gathering efforts. First, DG Study #8 (FY 84-88) on Cross-Service, Cross-Command, Defense-wide Programs was completed and reviewed by members of the DRB. The Deputy Secretary of Defense on June 22 directed that various actions be taken to assure that these programs are planned, managed, and evaluated to maximize the extent to which the service and agency programs complement each other. Moreover, the Under Secretary of Defense, Research and Engineering has selected the topic of joint programs as one of the principal subjects for the summer study of the Defense Science Board.

Misunderstanding of key PPBS concepts and system interdependencies

From the inception of this effort it was apparent that there were differing perceptions, even within DOD, of the PPBS process as a whole, and specifically of the extent of participation of certain DOD components. Several DOD-sponsored courses address PPBS matters and contribute to a better understanding of PPBS concepts, terms, and procedures. However, as might be expected, misconceptions are encountered mainly away from service headquarters, among individuals who are involved only at the periphery of the process. Consequently, they frequently feel they have insufficient input to and/or feedback from decisionmaking activities.

Since the primary PPBS participants comprehend and use the system as designed, and remain conversant with its continual refinement and evolution, this lack of widespread understanding could be viewed as unimportant. However, PPBS is a complex, interlocking process, requiring preparation, coordination, evaluation, and integration of information from all levels. Misconceptions cause confusion and delay, degrade the quality of inputs, and are counterproductive.

One problem of particular concern in relation to the linkage of planning to programming is the use of terms such as "strategy-resource gap," and "planning force." Where planning concepts and their intended use are not well understood, there exists the possibility that they will be misapplied or disregarded, resulting in a program that is not optimally aligned with expressed goals and objectives. For example, of the many considerations that underlie the planning phase of PPBS, none is more central than the force framework around which the planning and policy assumptions are built. In the course of our interviews, however, there were almost as many perspectives on the concept of force levels as there were staff offices. The variations in views of force levels and the differences in the uses made of those forces in PPBS are a very fundamental planning issue. That issue is focused on the difference between a planning force (as defined in the JSPD), which is significantly greater than any current or programmed resources can expect to achieve, and the force levels, toward which the DOD topline is aimed. The people and organizations at the highest levels of national security, who define this force and use it as a reference point in establishing relative levels of risk, have no problem. Others, however, believe that planning documents are not useful because concepts such as the planning force are "unrealistic and unattainable."

ALTERNATIVES

Sequence of defense-related decisions by an incoming administration

One of an incoming administration's first priorities should be to prepare and present its national defense strategy. On the other hand, it is important to avoid a "rush to judgment" without time for due consideration. The suggested solution is the definition of a "window" in late spring, which constrains premature publication of an official defense posture while providing the requirement to do so before congressional budget decisions become final. This approach attempts to discipline the system to improve the opportunity for utilization of analysis and planning.

The alternatives that follow are all based upon this concept. Variations reflect the mode of implementation.

1-1 The Congress could mandate that the President present an official defense posture statement by May or June of his inaugural year. This would vary, in level of detail, with the style and desires of the President, but would, at a minimum, set out the national defense priorities and the broad future strategy, force structure, and modernization objectives with an indication of what is roughly affordable. In addition, DOD could develop a new plan with a subsequent POM and budget cycle to be completed in December for the President's next budget.

Pros

1. This would provide early encouragement to identify and explore national security policy options and their consequences.
2. The existing pressures for rapid presidential action in February and March would be relieved, or at least a rationale would exist for a more deliberate approach.
3. The added time would allow for a reflective and comprehensive posture with respect to national security needs, providing an improved backdrop for the President's proposals for defense, as the administration moves forward.
4. The Congress would have available a complete statement of the underlying rationale for the changes and could review the amended budget in that context.
5. The suggested timing of this review and presentation would mesh well with the start of the next DG preparation cycle.
6. It is anticipated that relatively minor changes in the plan would be made at the national level in subsequent years of the same administration, except in reaction to significant national or

international events. This would enhance the stability of planning and make it simpler for DOD to prepare its military strategy for achieving the identified national goals and objectives.

Cons

1. The timeframe may be insufficient to develop a truly comprehensive program and to consider the full and long-term consequences of doing so, given the amount of analysis to be performed and possible delays in adding key officials.
2. Some near-term destabilizing condition might so alter the international balance of power that a clear statement of policy at this time could be against the best interests of the government.
3. It is possible that this alternative could result in foreclosing even more presidential options than occurs with the current practice, by making explicit choices further into the future.
4. Timing problems could result because of cycle overlaps. The POM review process would be ongoing within DOD when the posture statement was issued, and the question would arise of last-minute changes to respond to the new administration's position.
5. The effect upon congressional consideration of the current budget and testimony, which occurs at this time, is difficult to assess. For example, it could exacerbate congressional scheduling problems.
6. No real effect may result within DOD, except to delay any spring supplemental request.
7. The lack of parallelism in the treatment of defense compared to that of other budget segments should be addressed.

1-2 Instead of a congressional requirement, as in the first alternative, the preparation of a defense posture statement by the new administration could be a voluntary but recommended task for the same time and submission.

The pros and cons are the same as for the first alternative, but the voluntary aspect seriously weakens the perceived advantages.

1-3 The posture statement could be provided by the SECDEF rather than by the President.

The pros and cons are the same as for the first alternative with the following additional points.

Pro

1. This would provide the President more flexibility.

Con

1. It would be less authoritative.

Disconnects in multi-service programs

As indicated earlier, this is a complex issue. Some of the people interviewed felt that the current system was less than optimally designed and utilized for identifying and dealing with problems of cross-service and multi-service programs and concerns during the planning phase. They felt that these problems should be addressed via JCS reorganization and/or by expanding the role of the CINCs and elements of OSD.

However, the Working Group has not had the time, resources, or the information access to validate the existence of a systemic problem and to lay the foundation for the generation of alternatives in this area. It would appear that OSD and JCS have the primary responsibility for surfacing and resolving cross-service problems. For example, according to the latest revision of the JCS Memorandum of Policy No. 84 (MOP 84), dated February 1983, the following specific cross-service activities are performed by JCS:

(1) In JPAM,

(a) present the views of JCS on the balance and capabilities of the overall POM force, and

(b) discuss cross-service programs and issues and provide a coordinated assessment of their effect on national military strategy.

(2) In JSPD,

(a) identify C^3 (command, control, and communication) requirements cross-service, cross-program, cross-command, and international;

(b) identify and examine broad issues and programs, common to all services, that relate to meeting current and programmed forces.

Within OSD, the Office of Program Analysis and Evaluation (PA&E) has the responsibility for analyzing cross-service balance for major force programs. Other offices, such as Manpower, Reserve Affairs and Logistics (MRA&L), also have major cross-cutting concerns. The CINCs also have paramount interests in these areas, since the CINC plans integrate service capabilities. It is thus clear that the opportunities exist for cross-service analysis and evaluation, but there is an apparent need for an objective evaluation of the quality, consistency, and effectiveness with which they are conducted. The following recommendation is therefore offered for consideration.

1-4 A study team could be established having the requisite objectivity, expertise, and access to information to review the effectiveness with which cross-service review and analysis are performed.

Misunderstanding of key PPBS concepts and system interdependencies

1-5 OSD could take the lead in developing and promulgating uniform definitions and explanations of the linkages between strategic planning and policymaking, and "planning for programming."

Pros

1. With centralized development of such uniform definitions there is less chance of confusion.
2. This could consequently improve communication and morale within DOD.

1-6 In conjunction with the first alternative, improvements to the educational programs already underway could be initiated, both in the fundamentals of PPBS and in the link between national policy setting and the PPBS process.

Pros

1. Same as for the first alternative.
2. The chance of misinterpretation of partial information by the media and the public is reduced.

1-7 In conjunction with the first two alternatives, a special educational program could be targeted to all PPBS participants to upgrade their comprehension. This would be repeated as needed to reflect modifications, and for new participants.

Pros

1. Apart from the benefits listed for the first two alternatives, this would be of value within DOD because of recent changes in the role of planning, aimed at effacing the original charges about "the silent P." All concerned would then start from a common and current baseline of understanding.
2. With increased comprehension of the total PPBS process and the national policy context in which it is embedded, participants would have more appreciation of the guidance offered and greater incentive and ability to match programs to plans more closely.
3. The better understanding achieved through the implementation of this alternative would contribute to the identification of any real problems that may now be masked by the lack of a common basis of comprehension.

Cons

1. Implementation may be difficult, in view of the difficulties in identifying "all PPBS participants." Most DOD personnel are at least indirectly involved in PPBS at some time.
2. Implementation could also be difficult since PPBS is a dynamic, evolving system. It is doubtful that the frequently required updates in the course material would fully reflect the emerging and varying PPBS concepts, terms, and practices found throughout the various components of DOD.

SECTION 2: TIME HORIZON AND OUT-YEAR UNCERTAINTIES

STATEMENT OF STUDY AREA

This study area concerns PPBS procedures for addressing how today's program and budget decisions will affect future force structure levels, program mixes, and procurement quantities. An understanding of the future consequences of decisions minimizes the occurrence of later surprises that place unplanned demands on resources and narrow the program options available to decisionmakers (e.g., an unexpectedly steep rise in program costs).

The Working Group did not attempt to assess officials' behavior or decisions in specific instances, but rather focused upon whether PPBS reporting procedures are adequate for addressing this matter. The Working Group also did not address the quality of the out-year estimates used in PPBS, a factor which has received and is receiving considerable attention and study by other groups. The key question was whether reporting practices are designed to surface the needed information--i.e., the programmatic and dollar "tail" resulting from decisions for the budget year.

REASONS FOR STUDYING AREA

PPBS participants have stated that, too frequently, DOD's programs are begun or modified without considering how they will affect future programs and budgets. For instance, programmed buys of certain major weapons systems might be rescheduled and stretched out, possibly in response to reduced overall defense funding, without (1) sufficient attention being given to the future implications of the increased unit and support costs associated with a stretch-out decision or (2) reconsidering previously discarded alternatives that a stretch-out now makes cost effective.

The Working Group observed that there have been cases where DOD programs were developed and initially funded when DOD projections of the total obligational authority (TOA) available for later years turned out to be too optimistic. In such cases, DOD officials have been faced with the choices of stretching out programs, or cancelling lower priority programs, or both. The officials considering these alternatives require accurate information on program costs and budgetary consequences of each alternative.

Additionally, the relatively high "momentum" of many DOD activities, in which quick redirections or sweeping changes could entail high costs and disruptions, underscores the requirement for adequate information on the

long-term effects of decisions. Although most of DOD's budget is classified by OMB as "relatively controllable," practical constraints limit major redirections and sweeping changes. Significant changes to force structures of Army divisions, Air Force wings, or Navy carrier task forces are not made rapidly under normal peacetime circumstances, and therefore the associated operating and support costs are fairly stable from year to year. Given this, it is important that the probable out-year cost implications of force structure decisions be fully evaluated. Systematic evaluations of these out-year consequences can minimize the likelihood of undesired "locked in" requirements that limit future decisionmakers.

RESULTS OF WORKING GROUP REVIEW

DOD has the basic reporting vehicles needed for surfacing the out-year consequences of current decisions, but some refinements in related procedures would be desirable. PPBS has two main DOD-wide vehicles for providing information on the future effects of current decisions: the FYDP data base, extending to the budget year plus 4 years; and each service POM's Extended Planning Annex, containing information for 10 years beyond the FYDP period. Both are used to provide periodically updated information on future budgets and programs. The FYDP data base is updated three times a year to reflect key decisions--when the services submit their POMs, when services submit their budgets, and when the President submits his budget to the Congress. Each service's EPA is submitted once a year in conjunction with its POM submission. Additionally, the services have internal EPA-type documents that they use.

Several aspects of the EPA, warranting attention and action, came to the Working Group's attention.

EPA has limited use, especially in the military departments

The EPA itself is not considered an important document by two of the military departments and receives only limited attention in OSD--the EPA is used mainly by Program Analysis and Evaluation personnel at the OSD level. Except for the Air Force, the services largely view the EPA as an OSD-needed document. Accordingly, it receives a minimal investment of service staff time and resources. Usually two or three personnel coordinate the EPA exercise for each service. In the Army and Navy, the EPA that is submitted to OSD is not

used by the service in a significant way for assessing out-year trends. Rather, those services conduct their own EPA-type analyses reportedly geared more to their own planning and programming requirements.

At OSD, some analysts attempt to use the EPAs for assessing

- --the schedule for bringing new weapons systems and support equipment "on-line," so that potential sequencing problems can be identified;
- --the out-year dollar and manpower affordability of FYDP period programs; and
- --the need for FYDP period program starts to meet EPA period requirements, e.g., the research and development or acquisition initiatives needed to fill later "voids" created by the obsolescence or retirement of weapons systems.

However, certain POM and EPA submission timing matters have circumscribed the ability of analysts to fully use the EPAs. Furthermore, some MRA&L analysts state that they would find the EPA submissions more useful if they provided, where feasible, information on support costs by major weapon system. Symptomatic of the EPA's limited use in OSD is the fact that currently there is no OSD Program Review issue paper on EPA matters. Given this limited use, it seems that potential exists for modifying or eliminating the EPA. As it now stands, the EPA appears to many participants in PPBS as a paperwork exercise of limited value.

EPA submission timing limits EPA's aid to analysis

A related matter is that OSD's POM Preparation Instructions (PPI), which provide guidance to the services on their EPAs, permit the services to submit their EPA material weeks after their POM submissions, even though the EPA is essentially a POM exercise--i.e., it "runs-out" the POM an additional 10 years. The recent PPI for the FY 1985-89 POM permitted submission of EPA summary material as late as 2 weeks after the POM submission, with the detailed parts due no later than 6 weeks after the POM submission. The time gap between the POM and EPA submissions has grown smaller over the years. In calendar year 1982, service EPAs were submitted about 8 weeks after the POMs were turned in; the year before that EPA submissions lagged behind the POMs by about 14 weeks.

Only one service, the Army, now chooses to submit its EPA as an integral part of its POM package, and the other two services normally finalize and submit their EPAs several weeks afterward. Air Force officials stress,

however, that although their EPA is not submitted as part of their POM package, they develop EPA material before submitting the POM and use the material extensively in POM preparation. The Army makes the EPA part of its POM package as a way of demonstrating its view that an EPA-kind of analysis should be integral to the POM process, not because the Army relies analytically upon the EPA. The Army uses its own internal "Army Plan" for EPA-type analyses. Similarly, the Navy uses its own "Navy EPA," which is developed after the POM is submitted. Neither the Army Plan nor the Navy EPA is provided to OSD.

The absence of concurrent POM and EPA submissions, except in the Army's case, lessens the usefulness of the EPAs to OSD analysts--especially when the EPA submissions are made weeks after the dates set forth in the PPI, as sometimes happens. Even if submitted on time, the EPAs come in too late to be fully and carefully used by OSD analysts in their POM issue paper development. Most recently, analysts' first draft issue papers were due in mid-June, about 1 week before the due date on the services' detailed EPA materials.

The Working Group also notes that a delinked POM and EPA may permit a service to develop its POM while paying insufficient attention to the out-year implications. We believe that POM and EPA issues should be considered together.

EPA lacks alternative "excursions"

A principal difference between the regular EPA and the services' own internal analyses is that each service's EPA projection is based upon a single OSD-provided budget growth rate top-line--e.g., 1 percent real budget growth for each of the EPA years--whereas the services' internal projections entail "excursions." The excursions show how program trends and mixes over the years would vary under different top-line constraints. This permits the services to set priorities and identify the add-on (or cut-back) programs at different top-lines.

The OSD has recognized the usefulness of such excursions. It followed up its recent FY 1985-89 PPI with a suggestion to the services that, at their option, they supplement their 1985-89 EPAs with submissions providing the EPA information at an alternative (3 percent, compared with the 1 percent of the earlier PPI) top-line growth rate. The Air Force submitted the material, while the Army and Navy did not, reportedly because of their desire not to set a precedent of providing excursion information to OSD. The two services

apparently consider excursion information to be sensitive and internal, because such information reveals service program priorities. They believe organizations (OSD, OMB, etc.) could use this information for identifying budget cut-back options.

The Working Group concluded that such excursions enhance the usefulness of extended planning and related projections. Excursions under alternative top-lines add a note of realism to otherwise "iffy," single top-line projections because they recognize and incorporate the uncertainty that bears upon planning and future actions. Excursions can provide a good basis for making later adjustments in program levels and mixes when such adjustments are required by changed budget circumstances.

EPA not always constrained

In the PPI for the FY 1983-87 POM, OSD permitted the services to submit fiscally unconstrained EPAs. This produced a seeming budget disconnect between the last year of the FYDP and the first year of the EPA, as the EPA projections jumped up sharply at a rate probably inconsistent with realistic fiscal expectations. This led some participants to view the usefulness of the EPA analysis with skepticism. Also, the shift from constrained to unconstrained EPAs and then back to constrained EPAs, coupled with changing fiscal constraint levels, led some participants to see "short lives" in the usefulness of each EPA--a perception that reportedly contributes to cynicism sometimes expressed about the EPA.

Lack of common EPA categories

OSD guidance on the EPA permits each service to submit its EPA information in either a DOD-wide set of missions or its own mission set. To date, the services have chosen to use their own categories, which differ from one another in key respects. Following are the principal mission categories used in the services in their most recent EPAs:

Army	Navy	Air Force	Marines
Structure	Strategic	Strategic offense	Ground combat
Manning	Anti-submarine warfare	Strategic defense	Aviation combat
Training	Anti-air warfare	Strategic C^3I	Combat service support
Mobilizing	Strike/Anti-surface warfare	Tactical air	Supporting establishment

Army	Navy	Air Force	Marines
Deploying	C^3/I/Electronic warfare	Mobility	
Construction	Amphibious	Defense-wide support and C^3I	
Equipping	Mine	Development base	
Sustaining	Fleet support/ Mobility/Sealift	Centrally managed support	
	Other		

Because the Working Group did not have access to cross-service analyses, it could not determine whether this significantly impaired the EPA's usefulness for OSD purposes. Some PPBS participants at OSD, however, favor more uniform submissions that would, it is said, enhance the analytical usefulness of the EPA. We believe such a change could facilitate analyses of cross-service issues and the trade-offs between investment decisions and operating and support decisions. For example, mobility or tactical air matters could be more readily analyzed on a cross-service basis if these activities were summarized in cross-cutting categories.

ALTERNATIVES

The alternatives would require actions that could be taken by DOD itself. The thrust of the alternatives is to strengthen the EPA, rather than to weaken or eliminate it. The thinking of the Working Group is that the basic aim of the EPA is sound, and that another EPA would have to be invented if the current one were eliminated. The task at hand is to improve the existing EPA to make it more useful.

OSD study

2-1 OSD could establish a temporary group to study EPA practices and needs and to propose revised EPA requirements, with the objective of expanding the usefulness of the EPA at the service and OSD levels. The study group could include in its focus an examination of whether the EPA's usefulness would be enhanced by

- **—modifying the kinds of information reported in the EPA, e.g., by including information on support costs by weapons systems; and**
- **—having the services submit their EPA information in more consistent categories. Concerning the categories, attention should be given to developing structures that facilitate analyses of cross-service issues in terms of capability and related acquisition and support costs.**

Pros

1. Including information on support costs by weapons systems would enhance the usefulness of the EPA to the support activities community and others.
2. A more consistent EPA framework could facilitate analysis, especially on cross-service matters.

Cons

1. Adding support costs by weapons systems would be particularly difficult for the Army and (to a lesser extent) Navy, given their many support activities that are not centered on a weapons system.
2. Changes in the EPA categories in order to maintain comparable categories and information in the POM and EPA periods, could require changes in the POM categories, and this would entail extensive and costly changes to existing data bases.
3. A shift toward more consistent categories might lessen the potential usefulness of the new structures to the services for their own analyses.

Link POM and EPA submissions

2-2 OSD could require each service to submit its EPA material concurrent with its POM submission (as in the Army's POM-EPA package).

Pros

1. Making the EPA an integral part of the POM package could enhance consideration during POM development.
2. This alternative could enhance review of the out-year consequences of FYDP period decisions.

Con

1. Integrating the POM and EPA materials would intensify the already heavy workload associated with POM preparation.

Excursions

2-3 OSD could require excursions at alternative top-line change rates in the EPA submissions.

Pros

1. Such excursions would enhance the potential usefulness of the EPAs by providing information on alternatives under more than one "what if" top-line constraint.

2. Excursions could lend some stability to the EPA data from year to year. An EPA with more than one set of assumptions could retain relevancy over a longer period. This could cause the EPA to be treated more seriously.

Cons

1. The services, with the Air Force being a possible exception, would object to providing excursions, seeing such information as sensitive, internal information.
2. Excursion information would increase the paperwork and size of the EPAs.
3. The uncertainty of funding levels and costs 10 to 15 years in the future reduces the usefulness of excursions at alternative levels.

OSD program review

2-4 OSD could include an assessment and summary of the outlook for the EPA period in the Program Review Book I, Policy and Risk Assessment.

Pros

1. This would focus more attention on the out-year results of current decisions.
2. The importance of long-term projections would be enhanced.
3. This could lead to improved EPAs in future years.

Con

1. The Program Review already is overcrowded with issues and paperwork.

SECTION 3: STRUCTURES OF INFORMATION IN PPBS

STATEMENT OF STUDY AREA

PPBS moves from broad decisions in the planning phase to activity and force-structure oriented decisions in the programming phase and to considerably more detailed decisions in the budgeting and execution phases. The information structures supporting those decisions must present information that is comparable, properly displayed, and available at the appropriate point in the decisionmaking process. The structures of information by organization, mission, commodity, or appropriation that are used in each phase of PPBS should be, and have been, developed on the basis of the analysis and decisions expected to be undertaken in that phase.

The planning and programming phases of PPBS are conducted with primary attention on "outputs," while the appropriations account structure requires a more "input" oriented focus for the subsequent phases. The ramifications of a change in appropriations to an output orientation will be fully discussed in chapter 4. This study area is confined to the structures of information that support decisionmaking in PPBS exclusive of that fundamental shift in orientation.

REASONS FOR STUDYING AREA

As the Working Group compiled descriptions of PPBS operations, the multitude of information "sorts" and the wide variety of information required by decisionmakers in all phases of PPBS became obvious.

The diversity of decisions (from broad priority statements to specific expenditure plans) and decisionmakers (from the President and the Congress to program managers and unit commanders) creates extraordinary demands for information support. To assess the diversity and complexity of the structures of information involved, the Working Group reviewed major PPBS documents and decision points and the information that supports each.

RESULTS OF WORKING GROUP REVIEW

Decisionmakers use different structures of information to support decisionmaking at practically every point in the chronological flow of PPBS. Because many of these information presentations are specifically tailored to the decisionmakers' needs at a particular time, they may be limited in their suitability for analysis along other dimensions.

Logic and the observations made by some participants in the process lead the Working Group to believe that the use of widely disparate structures of information (requiring as it does the aggregation, reaggregation, disaggregation, inclusion, exclusion, and transmission of an incredible variety of types of data) presents ample opportunities for disconnects, omissions, oversights, and confusions. Among these might be difficulties in

--performing cross-phase analysis,

--performing cross-service analysis, and

--performing analysis of defense budgets by those outside DOD.

Much remains to be done to confirm or dispel these concerns. The many structures involved and the hundreds, if not thousands, of types of data and analysis involved preclude any study group that lacks access to primary documents (such as the actual text of the DG and out-year data from the FYDP), from reaching detailed conclusions on this point. We hope, however, that these concerns would be a focus in future consideration of PPBS.

In the course of our study, the Working Group was able to identify three areas that appeared to present significant structure of information problems: "the four pillars of defense," the FYDP, and Program Budget Decisions (PBDs). These are addressed with alternatives.

The four pillars

The elements of the four pillars of defense have been used in defense circles for decades. In the past few years the construct has assumed the status of dictum in PPBS with the use of the elements--readiness, sustainability, modernization, and force structure--in the DG. It now appears that the construct is being used for functions far beyond its capacity.

The four pillars work well when used to issue broad policy guidance and consider capabilities. For instance, the four pillars can be effective for expressing relative priorities when broadly applied to allocating resources and considering war fighting capabilities--especially when discussing changes in resources and capabilities. Indeed, this is the construct's major attractiveness, and, its supporters claim, this is its major use. Furthermore, the construct, with its relatively few elements, enables senior policymakers to communicate broad policy guidance. A less-aggregated set of categories could diffuse the policy direction value of guidance. This has been the major failing of other less-aggregated management tools that have been used in the past.

However, when the four pillars are used to categorize specific resources they suffer two serious limitations:

--The four categories are not mutually exclusive, and the interconnection between elements frequently is not recognized. As a result, they contribute to either undervaluing multi-capable input or double counting.

--They cannot meaningfully contain the entire Defense budget. The connection of certain "open the door" or "core" costs to any of the pillars is sufficiently indirect and those costs so vastly multi-valued that assignment to any single pillar is arbitrary and does not contribute to decisions.

In addition, the difficulties for DOD have been complicated by the fact that specific definitions of the elements have not gained full assimilation throughout the defense establishment.

In light of the repeated assertions from some participants that the elements of the four pillars lack a common, agreed upon set of definitions and applications and equally forceful assertions to the contrary, we sought out authoritative statements of what the pillars mean. We found that the Joint Military Terminology Group within the Joint Staff approved a "standard definition of the term, military capability, which includes the four major components of readiness, sustainability, modernization and force structure." This definition is but 75 words long. It was transmitted to the Deputy Under Secretary of Defense for Policy on February 8, 1982. In February of 1983, however, DOD issued its Force Readiness Report for fiscal year 1984. This included an equally brief (70 words) but not identical definition which differed in 11 specifics from the JCS's definition.

Since the most important use of the elements of the four pillars has been in the DG, we asked DOD representatives on the Working Group to compare the definitions cited with those in the most recent DG. They report that the definitions of the elements in the DG are not identical to either of those cited, are lengthier, and are more specific.

Within OSD, the Assistant Secretary for Manpower, Reserve Affairs and Logistics (MRA&L) has developed a set of Program Resource Categories that attempts to use three of the elements (but not "force structure") in building a multi-dimensional, output-oriented structure that can capture or cut across all missions. MRA&L is cooperating with the Assistant Secretary for Program Analysis and Evaluation (PA&E) in refining this set of resource categories.

While some people told us that the limitations we have cited do not inhibit the use of the four pillars and that progress is being made toward addressing these limitations, we believe that the problems of this construct are significant in light of the increased use being made of it today, such as the detailed sorting of resources and categorization of inputs. The Working Group is not convinced that the construct can be at all useful in these processes. In fact, its use can be counter-productive when sorting resources or categorizing inputs because it is nonexclusive and nonexhaustive. Therefore, its use should be limited to broad guidance at the policy level.

Five-Year Defense Plan

For over 2 decades, DOD has used the FYDP to support and document resource allocation decisions. To remain a useful tool, the FYDP must retain the capability of being sorted in many different ways to support a variety of analyses.

Its continued use under different Secretaries of Defense, who have had markedly different management approaches, is testimony that the FYDP has played its role well. In fact, Secretary of Defense Weinberger has said that the FYDP "is the heart of our Planning, Programming, and Budgeting System ... it has shortcomings, as would any common structure, but it can evolve as our needs change."

The Working Group has heard complaints from numerous sources about the limitations of the FYDP and its basic structure--Major Force Programs (MFPs), Program Elements (PEs), and appropriations--for sorting information along needed lines for functional, program, or mission oriented analysis. This may reflect a need to create new PEs or to update their groupings in ways that serve the evolutionary needs of the system for comparability and utility.

Program Budget Decisions

At the end of the budget formulation phase, each service must cope with yet one more structure of information, PBDs. Essentially this structure is the appropriations structure, subdivided according to activities.

While this structure is familiar to the services and we have been told that tracking back to earlier stages in the process does not pose a significant problem, the Working Group believes that the process of responding to hundreds of individual PBDs leaves openings for problems.

A turn-around time, compressing to 1-to-2 days at the end of the budget review, is allowed for each service to decide to appeal or not to appeal each PBD. An appeal is refered to as a "reclama." Since PBDs come to the services over a period of weeks, they must make decisions on early PBDs without knowing the fate of issues covered in PBDs to be issued later.

ALTERNATIVES

The four pillars

3-1 The SECDEF could develop and issue guidance on the applicability of the four pillars and explicitly define the terms. This guidance could acknowledge the limitations on the utility of the concept and perhaps involve explicitly titling the concept "the four pillars of change in war fighting capability."

Pros

1. The current confusion over the definition of each pillar could be reduced.
2. Such guidance should inhibit misuse of the construct.
3. Use of the construct to convey broad priorities would be reinforced and enhanced.
4. Attention could be concentrated on the value of the construct for discussing changes in capabilities.
5. The efforts of MRA&L, PA&E, and the Plans and Policy Directorate of the Joint Staff could be reviewed as a start.

Cons

1. To the extent that the definitions developed contain ambiguity, they could cause some users to ignore the problem of the interconnections between elements.
2. Limiting the construct to only describing changes in capability would preclude using it to categorize and describe the whole Defense budget in now familiar terms.

3-2 Instead of the first alternative, the four pillars concept could be abandoned. In its place, DOD could design a substitute that would avoid the two limitations of the four pillars. Consideration could be given to including a category for common administrative and support costs.

Pros

1. The new construct could be used to categorize all resources less arbitrarily.
2. The new construct might not be liable to misuse.

Cons

1. The categories might have less recognized meaning in war fighting analysis.
2. The level of understanding gained of the four pillars would be lost, and an understanding of the new construct would have to be built.
3. Many outside of DOD who have become used to the concepts embodied in the four pillars would still expect future explanations of Defense policy to be couched in terms of the four pillars.
4. DOD might not be able to develop an alternate construct that would be superior to the current construct, and thus the time spent on the effort would be wasted.
5. Use of a new category for administrative and support costs would hamper analysis of "total" program and associated costs.

THE FYDP

3-3 DOD could conduct a full review of this crucial data base with an eye toward the triple goals of (1) maintaining the value of the historical data contained in the FYDP; (2) making the FYDP more useful to today's decisionmakers by revising, where needed, the MFP and PE structure; and (3) leaving to tomorrow's decisionmakers a data base that can accommodate innovative analysis.

Pros

1. With the 25th anniversary of the FYDP approaching, this is a good time for such a review.
2. The importance of the FYDP data base to DOD makes periodic reviews vital.
3. The rapid increases in technology for data handling in the field and in the headquarters suggest that potential for improvements may exist.
4. The increasing analytical sophistication of the users and changes in the questions that are important may justify changes in the way the data are identified.
5. A review would look at the cumulative effect of changes made over the past 25 years.

Cons

1. Any re-evaluation of the basic structure of the FYDP runs the risk of developing recommendations that, if adopted, might have unforeseen consequences for the structure's use.

2. The loss of historical continuity could invalidate an important data base for analyses and projections.
3. Changes to accounting and other information systems could be expensive in comparison with benefits.

Program Budget Decisions

3-4 PBDs that raise issues affecting earlier PBDs could reopen the reclama deadline for those earlier PBDs.

Pros

1. The connection between different PBDs would be formally recognized.
2. Disconnects would be systematically considered.
3. Time spent at the military department and defense agencies reviewing and preparing reclamas might be reduced.

Cons

1. The authors of PBDs might be discouraged from including items they feel are justified to avoid re-opening issues already decided satisfactorily.
2. The services and defense agencies already have formal channels (Major Budget Issue cycle) and informal channels for addressing problems of this sort.
3. There must be a time when decisions are considered final. Although redress procedures may still be in place, these "final" decisions need to carry the weight of finality to assure that further consideration is granted only when the problem is acute.
4. To gain the opportunity to revisit an earlier decision, "game playing" may be fostered.

3-5 Instead of the first alternative, a single suspense date for an omnibus reclama to PBDs could be set at the latest possible date.

Pros

1. This alternative shares all of the pros listed for the first alternative and also includes the following.
2. The military departments and defense agencies would be able to consider all PBD issues together and reach a decision knowing all the related issues that have been raised in PBDs.
3. While additional PBDs reflecting late decisions might well have to be issued after the omnibus reclama deadline, they would constitute a relatively small number of issues when compared to the volume of issues that could be dealt with in the omnibus reclama.

Cons

1. While decisions rendered in PBDs are "scored" when issued, knowing that the reclama deadline had not passed might lead some participants to treat the issues as still open.
2. If the omnibus reclama deadline were too early, the respondents might not have sufficient time to construct a balanced reclama.
3. The analysts preparing PBDs would be deprived of feedback information resulting from earlier PBDs, and thus decision quality would be degraded.
4. The positioning of an omnibus reclama so close in time to the major budget issue meeting would detract from the value of each.
5. An omnibus reclama would constitute a major "piling up" of work at the end of the budget review and might "overload" OSD's review capacity, given the limited time available for review.

SECTION 4: BUDGET PRESENTATION AND JUSTIFICATION

STATEMENT OF STUDY AREA

Budget presentation and justification cover all the means available to the executive branch for communicating, advocating, and justifying the President's budget request to decisionmakers in the legislative branch. For our purposes, however, we have concentrated on the formal budget justification documents submitted by DOD to congressional committees. These documents are a link between the decisionmaking processes of the two branches and, as such, must meet tests of level of detail, format of presentation, content, and timeliness.

REASONS FOR STUDYING AREA

Many DOD document preparers are critical of the burden imposed by the (1) volume, (2) level of detail, and (3) multiplicity of measurements required for the documents provided to congressional committees. That criticism is especially relevant because of the trade-off between quantity and quality involved when time available for data collection, verification, and analysis is fixed by strict executive and congressional schedules for submission. Preparers also have noted that when decisionmakers must review data going to higher authority but not relevant to the decisions to be made, the relevance of essential data may be obscured and temptations to micro-manage may increase.

Many document users are critical of the content, format, and/or timeliness of the documents. They also claim either that the wealth of detail provided is not the information needed for decisionmaking or that needed information is obscured by superfluous material.

The wide range of criticism indicates a great potential for improving the budget presentation and justification documents and procedures.

RESULTS OF WORKING GROUP REVIEW

To determine the extent of the criticism among the congressional users of these documents and to understand the nature of the criticism, the Working Group met with staff members of many of the congressional committees and subcommittees having jurisdiction over Defense budget items. These interviews were conducted between November 1982 and February 1983. What we heard served

to confirm that the users have widely differing views about what material should be supplied as well as the adequacy of the material currently being supplied.

Many of the comments related to important technical issues, such as

--inability to cross-walk between accounts;

--excessive concentration on changes from the previous year at the expense of full program explanation;

--problems in determining future operating costs for construction projects proposed for the budget year;

--absence of data on plans for using nonappropriated funds, which might affect the need for items proposed for funding with appropriated funds; and

--lack of current execution data.

Other comments related to areas where the justification documents were seen as sufficient or even excellent:

--The justifications serve as an excellent "dictionary" in which to look up needed specifics.

--The justifications constitute an excellent line of communications from the executive branch to the Congress.

Some of the comments we heard were contradictory, reflecting the differences of opinion between users of the documents about the role of the documents:

--There is too much information provided.

--There is too little information provided.

--The documents are tailored to meet the needs of the Appropriations Committees at the expense of the Armed Services Committees.

--The documents are tailored too much to meet the needs of the Armed Services Committees at the expense of the Appropriations Committees.

--The commodity orientation of the documents does not serve the broader needs of the Budget Committees.

By far the most frequent observations and the ones raising the most fundamental questions are the following:

--The appropriations orientation of the justifications does not make it readily possible to track items in the budget requests to mission capabilities.

--The justification documents are not designed to shed much light on future program levels so it is difficult to determine the effects of one year's budget level on future requirements.

--The value of the justification materials begins to deteriorate as soon as they arrive on the Hill due to a lack of periodic updating of information and the absence of up-to-the-minute execution data.

In October of 1982, the Subcommittee on Defense of the Senate Committee on Appropriations issued its report to accompany the fiscal year 1983 Defense appropriations bill. The report included the following comment on budget justifications:

> The Committee is disturbed over the continuing inadequacy of the documentation it requires in support of the President's budget estimates. Too much of this justification material has evolved into 'boiler plate' with no accompanying up-to-date and relevant information to support program funding requests. In some cases, budget estimates involving more than $1,000,000,000 in new budget authority are dismissed with a few typewritten lines and little or no allocation of the estimates by program and activity . . . . This situation is neither necessary nor defensible.

In response to congressional criticism on lateness, the Deputy Assistant Secretary of Defense for Program and Budget (DASD(P/B)) contracted for an analysis of the production process for budget justification publications. The contractor was directed to focus on the mechanics of the process, not on the content of the justification books or the views of individuals in the legislative branch.

The result of this effort was a three volume Study of Congressional Justification Books released in December of 1982. The basic philosophy underlying its recommendations appears to have been an attempt to reduce unnecessary or duplicative detail, reduce repetitive steps, standardize material wherever possible, and consolidate material that was difficult to process, such as classified material. The contractor estimated that the recommendations, if adopted in their entirety, would reduce the justifications by 4,700 pages while allowing delivery to the Congress of the entire set within 10 days after the President's budget had been submitted.

The initial response to the earliest recommendations was an October 27, 1982, memorandum about printing from the DASD(P/B) to the budget officers of the military departments and defense agencies. It outlined new procedures adopted by Defense Printing Services and listed new restrictions on size, format, color, and scheduling. Shortly after this memorandum was issued, the DASD(P/B) received a series of requests for exemptions. Both the Military Personnel and Intelligence justification material were exempted from compliance.

At about the same time, DOD began to address the criticisms about "boiler plate" expressed in the October 1982 Senate Appropriations Committee report. The various DASD(P/B) directors began meeting with their congressional counterparts to determine the desired modifications to the justification materials.

After the contractor's study and the contacts with congressional staff were completed, the staff of the DASD(P/B) went through the contractor's recommendations, the comments of the Appropriations Committee staffs, and the observations of the DASD(P/B) Program Directors to consolidate them into a series of changes to the content, format, and timing of the justifications. These changes were promulgated in a series of memoranda to the budget officers of the military departments and defense agencies between November 1982 and January 1983.

These changes included

--discontinuation of some justification books, their replacements being descriptive item-by-item summaries with highlights of new starts, as agreed following the FY 82 summer review;

--changes to the Military Personnel justifications by emphasizing standardization and controlling exceptions;

--inclusion of narrative statements for each increase and decrease in all summary schedules;

--separate identification for all bonuses;

--changes to the Operation and Maintenance justifications by reduction of unnecessary bulk in the narratives;

--standardization;

--breakdown of costs in each activity group and limit of one page for each item of narrative; and

--issuing the Committee Staff Procurement Back Up Book, (formerly the Willson Book), and the institution of a similar backup book for major procurement to provide cost category detail and test data.

Changes that could not be implemented in time for the fiscal year 1984 budget justifications were deferred and will be implemented with the fiscal year 1985 budget justifications. On January 16, 1983, additional guidance was issued on multi-year procurement and reserves. The fiscal year 1985 changes were scheduled to be reflected in the proposed June 1983 update of the DOD Budget Guidance Manual.

All of our interviews for this study area with congressional participants were conducted before these changes were instituted. The Working Group did not conduct additional interviews after the fiscal year 1984 justifications had been submitted because the DASD(P/B) staff were conducting their own assessment of the recent changes. The Working Group was to have access to the results of this assessment but a slippage in their schedule has delayed such access. However, DOD did make a conscientious effort to improve the justifications, and the results of the assessment could guide future efforts for further needed improvements.

The major thrust of the recent changes was an effort to improve on what had been done before. No change in the concept of justifications was undertaken. Thus, it appears likely that the observations we categorized as raising fundamental questions remain unaddressed. These observations dealt with mission orientation for justifications, out-year effects of budget and program levels, and periodic updating of justification data.

ALTERNATIVES

4-1 DOD could complete its assessment of the changes in justification materials that were implemented for fiscal year 1984 and use the results of that assessment in devising additional improvements for the fiscal year 1985 justifications.

Pros

1. An understanding of the value of the improvements already implemented would allow a judgment as to the potential for next year's changes.
2. Any good will created among congressional users would improve the chances for constructive discussions on the subject of future changes.
3. Any misunderstandings of congressional requests would be identified as soon as possible.

Con

1. Since the changes agreed upon have not all been implemented, such an assessment would be premature.

4-2 Along with the first alternative, DOD could conduct another assessment, similar to the one being conducted this year, after the fiscal year 1985 justifications have been submitted.

Pros

1. Additional changes will have been implemented, which should be subject to the same examination as those implemented this year.

2. The changes scheduled for implementation next year combined with those implemented this year constitute a package that should be subjected to examination as a whole.

Con

1. Communication between congressional participants and officials of the DOD should be good enough to obviate the need for a special assessment.

4-3 Instead of the first two alternatives, DOD, in consultation with congressional participants, could conduct an annual assessment of the justification documents at the end of each year's cycle.

Pros

1. The justifications are too important to DOD and to the Congress to be allowed to stagnate with major portions continued from year to year merely because they were contained in the previous year's document.
2. The process of producing the justification documents is too expensive in terms of manpower as well as dollars to be performed without a review for efficiencies as well as utility.

Cons

1. The Congress is perfectly capable of letting DOD know when it is dissatisfied.
2. This process is too expensive and complex to justify the repeated small changes that could be expected as a consequence of annual review.

4-4 To the extent the reviews referred to do not address the fundamental issues of mission-orientation, access to out-year data, and periodic updating of data, an appropriate forum could be found to consider such issues.

Pros

1. Such a forum could bring together key responsible officials and users of the justification materials for considering those issues that we have termed fundamental.
2. The Congress' defense decisionmaking process would be aided by clearer mission-orientation of the justifications.
3. Congressional decisionmakers need a better understanding of the out-year implications of proposed budget and program levels.
4. The usefulness of the justifications for congressional users would remain high throughout the period when the Congress considers the budget, if the justifications were periodically updated.

5. Since the function of the justification material is really to persuade the Congress to grant the executive branch's request for authority and appropriations, the closer DOD can come to meeting the desires of the Congress for justifications, the better the chances of obtaining the requested levels.
6. If the Congress sees DOD take the lead on this subject it may be less suspicious and more cooperative.
7. If DOD takes the lead on this subject it may be able to communicate its views to the congressional participants in the most positive terms.

Cons

1. The justification process is too delicate to allow for fundamental reform without overwhelming expressions of desire from both sides.
2. Given the different views of the Appropriations, Armed Services, and Budget Committees, it may not be possible to meet the desires of the Congress--those desires may be contradictory.
3. The question of out-year data might raise questions of access to information on the alternatives under consideration.
4. The question of periodic updating of data implies that DOD should justify "a moving train" rather than support the President's budget request until it is amended.
5. Data are updated when such changes are material and significant. Continuous updating to reflect immaterial changes would detract from the ability to the Congress to identify important issues and would degrade the decisionmaking process.

SECTION 5: MANAGERIAL FLEXIBILITY AND LEGISLATIVE CONTROL

STATEMENT OF STUDY AREA

The conflict between the executive branch's need and desire for flexibility in managing programs and the legislative branch's need and desire for control of policy requires the maintenance of a balance that is difficult to strike. This is especially true when the executive is required to justify in detail its request for program and budget authority and is then held accountable by the legislature for the faithful execution of the program as well as initiatives added by the legislature. Both branches have an equal interest in striking the proper balance if their constitutional duties are to be carried out efficiently.

REASONS FOR STUDYING AREA

The literature reviewed by the Working Group is replete with allegations of difficulties posed for both branches by the struggle between flexibility and control. In the early interviews we conducted with people involved in PPBS, we gathered further comments reflecting concern over the level of control and the degree of flexibility. Among the areas cited with reference to flexibility are rigid reprogramming requirements, funding pay raises through supplemental appropriations, and line-iteming of appropriations. Control issues have been raised with reference to the level of departmental adherence to enacted policy, efforts to increase the scope of authorizations, and impoundment controls.

RESULTS OF WORKING GROUP REVIEW

In the judgment of the Working Group, the executive and legislative branches have struck a fairly healthy balance between the need for flexibility on the one hand and the need for control on the other. Essentially, that balance can be reasonably maintained only if there is a balance between trust and suspicion on the part of the participants in the legislative branch. This is true because it is that branch that exercises the control and grants the flexibility.

At the height of the controversy over the war in Vietnam and the debate over the War Powers Act, there appeared to be precious little trust and a great deal of suspicion among many on Capitol Hill. During World War II, on the other hand, there was precious little suspicion and a great deal of trust.

Today, the balance appears to be fairly even between trust and suspicion, and, as a result, the balance between flexibility and control seems fairly even. However, some observers have begun to suspect an erosion in the level of trust. In the dynamic atmosphere of our federal government, the balance between executive flexibility and legislative control cannot remain immobile. Even when the balance is relatively equal between the two extremes, as our investigation leads us to believe it is at this time, each branch will, as a result of the duties imposed on it by our system of government, probe and test the resolve of the other and seek to improve its relative position.

In conversations held with various participants in the process in the legislative branch, we found agreement that there is a need for a proper balance between flexibility and control and that the current balance point was fairly close to the right one. That is not to say that change is not desired, but that the desired changes were what we would call fine tuning: the current process should be improved rather than attempting radical changes. In the executive branch we also found that most participants with whom we spoke felt that any changes needed were essentially a matter of fine tuning.

Each participant in the process would do well to consider the implications of his or her actions for the balance between trust and suspicion. This would facilitate efforts to achieve an acceptable balance between flexibility and control. For instance, any action by a participant in the executive branch that could be interpreted as a failure to comply with congressional directions may heighten the desire for increased control. Conversely, ambiguous congressional actions may impede the executive's ability to comply forthrightly, and perceptions of a lack of such compliance may fuel the fires of suspicion.

Since the balance point between flexibility and control is never immobile, it can never be said that the issue "is not a problem" or that the problem of balance "cannot be verified." It must be subject to continuous examination and evaluation. The Working Group's judgment that the current state of balance seems fairly even does not minimize the interest of either side in avoiding the imposition of inefficiencies in the name of either flexibility or control.

As our review was coming to a close, the United States Supreme Court issued its ruling in the case of Immigration and Naturalization Service vs. Chadha (the "Legislative Veto" case). The ruling could raise many questions concerning the balance between the branches. These questions have not all

been identified as yet, let alone answered. Questions could be raised concerning such things as procedures for deferrals, transfers, and reprogrammings. How this decision affects the balance between the branches will ultimately be determined by the changes adopted by both branches to comply with the Court's mandate. Any consideration of the alternatives identified by our review or of other refinements to current procedures will, of course, have to be conducted with an eye toward the developments flowing from what has already been identified as a landmark decision.

Our review identified three areas where careful attention to the system could benefit both sides without significantly altering the balance: the amount of time spent on reprogramming requests, the clarity and timing of congressional actions, and the level of detail in line items.

Reprogramming requests

Statutes, regulations, policies, and procedures used to make adjustments to approved budgets have evolved over the years in response to the need for flexibility with essential control. For example, the process of reprogramming is said to have originated as an agreement between the Defense subcommittees of the Committees on Appropriations and the military departments at a time when no other federal departments were required to submit equally detailed spending plans nor given such latitude in the implementation of approved plans.

Today, reprogrammings constitute an important adjustment activity that is designed to foster efficiency. It allows managers the flexibility needed to cope with such factors as changed circumstances affecting the executability of programs and the growth of program costs beyond the levels estimated. It also preserves for the Congress the ability to review the managers' actions without the necessity of using the full legislative process.

Recognizing that some reprogramming requests raise more serious questions than others, and therefore require more careful consideration, PPBS participants still felt that it generally takes too long to obtain reprogramming decisions, whether approvals or disapprovals.

In addition to being unanimous in criticizing the amount of time taken by the Congress to consider reprogramming requests once they have been submitted by the services, they were also critical of delays within the services and the OSD. The delays were attributed primarily to difficulties in identifying and reaching agreement on those items and/or appropriations from which reprogramming funds would be taken. Decisions on funding sources can be

time-consuming within both the originating service and OSD. A reprogramming request is subject to many levels of review by the originating service before it is submitted to OSD, where it is subject to more review and possible amendment before approval and submission to OMB (in the case of General Transfer Authority reprogrammings) and then to the Congress for consideration.

One congressional participant cited an example of the inability of the services and OSD to move the request through departmental and service channels in a timely manner. This concerned a request that took 4 months to clear DOD only to have DOD officials ask the Congress to expedite consideration before the request had been approved by OMB. It was noted, incidentally, that the process of review in OMB for General Transfer Authority requests posed no problem at all, and that OMB provided rapid service when needed.

The Congress is not always able to adhere to its self-imposed time limits for consideration of prior-notification reprogramming requests, and, in these cases, deferrals of the deadlines may be requested. These delays can be caused by difficulties with congressional schedules, perceived deficiencies in the information supplied in justification of the proposed reprogramming action, or by the controversial nature of the proposed action, making the achievement of agreement between congressional participants difficult to obtain.

Among the consequences of undue delay in the processing and approving of reprogramming requests are increased uncertainty for program managers who are giving up funds; delay in resolving uncertainty for program managers who are receiving funds; increased danger that decisions will be based on out-of-date data; and disruption for programs that are either identified as potential sources of funding but later not selected, or selected by one level of authority but rejected as sources by a succeeding level of review authority.

Congressional clarity and timing

Participants in the executive branch identified a number of problems in complying with congressional instructions that are unclear, require accommodating actions that have not been explicitly identified by the Congress, or have been based on information that is not fully applicable at the time of execution. Examples offered included undistributed adjustments to budget requests, the use of supplementals to fund pay raises, and the large percentages of pay raise funding which the departments are instructed to "absorb" out of existing resources.

Undistributed adjustments may appear to have the effect of providing officials of DOD with maximum flexibility since it is up to them to determine how to accommodate congressional directions while limiting the damaging effects. In practice, however, this burdens the executive branch with the task of determining which of the several program elements approved by the Congress should not be executed as justified. This determination, of course, runs the risk of second guessing by the Congress, which may, in turn, arouse suspicion over the way the executive has chosen to accommodate the congressional mandate.

OMB Circular A-11 currently requires that an agency's estimate of pay costs be based on pay scales in effect at the time the agency's budget estimates are submitted, not on the basis of anticipated pay raises. Pay raises are handled through supplemental appropriations, which disrupt the orderly process of budgeting and execution.

By handling pay raises through supplemental requests, budgeting in both the civilian agencies and DOD is disrupted. But this may affect DOD to a greater extent because of the differences between the appropriations accounts for "Salaries and Expenses" used for civilian agency funding and the military pay appropriation accounts used for DOD. One major complaint heard about the handling of military pay raises is that when pay raise funds have to be handled late in the fiscal year, any absorption must be obtained out of program resources that are already committed or, to avoid such a situation, those resources must be withheld from obligation beyond a time that would be reasonable for efficient management.

Recognition of the differences between civilian and military pay accounts was part of the reason the Congress appropriated the funds for the October 1982 military pay raise in the regular enactment for fiscal year 1983, which was a continuing resolution. The Congress has begun the process of providing funds for a pay raise in its regular enactment again this year. However, no declaration of permanent policy has been made. Thus, the practice of providing pay raise funding in the regular appropriations has not been fully institutionalized but is gaining acceptance.

The President proposed "a one-year freeze . . . for federal civilian and military pay" in his budget message for fiscal year 1984, which was submitted in January of this year. This has led some to believe that the executive branch is now treating raises in the regular budget submission. However, the budget document released at that time made it clear that no change had been

made in the procedure for determinations on pay raise questions, even going to the extent of saying "the final decision on the amount of the fiscal year 1984 pay increase will be made in the late summer."

The unusual action of the Congress in mandating a high absorption rate (25 percent) for the military pay raise of October 1982 focused attention on the unique problems of accommodating absorption instructions within military pay accounts. An OSD official stated that

> this is a very serious problem, in terms of the hundreds of millions of dollars of DOD programs that have been cancelled to finance the 25 percent pay raise absorption, and in terms of the massive and expensive problems arising as Congress denies significant portions of the reprogramming requests developed to carry out that financing.

Military pay accounts, while allowing for items such as subsistence and change of duty station expenses, are in the main dedicated to pay and allowances. This allows for far less flexibility than the appropriations accounts commonly used to fund civilian agencies. For example, the Nuclear Regulatory Commission's "Salaries and Expenses" appropriation contains the same number of personnel line items as the military services--six--but also provides funding for other purposes such as equipment, supplies, transportation and utilities.

Detailed line iteming

The current practice of appropriating funds for major procurement accounts by line items links projected costs for each item with the quantity to be procured. This can limit managerial flexibility in making adjustments, but some PPBS observers believe it can also provide an incentive for making accurate cost estimates and adhering to planned schedules. Accountability for estimates and plans forms the basis for the understanding between the executive and legislative branches on which the budget process is founded. When cost estimates provided in the budget presentation prove to be too low, for whatever reason, responsible officials must take action. Their choices may include making changes to the item to reduce costs, if that can be accomplished without violating the terms of the original justification; returning to the Congress for either additional funding or approval of a different schedule; or finding a source for reprogramming, which must be cleared through numerous levels of approval. The time involved in making these choices and securing the necessary approvals can result in program delays and inhibit efficient program management. If either increased funding or reprogramming is selected, the Congress will receive requests that must be

reviewed, heard, and decided. This increases the demands on its time and adds to the pressure to focus on details that may or may not have a direct application to major national policy considerations.

The perception exists within DOD that the problems involved in a manager's task when cost estimates miss their mark by even a small percentage (whether the cause of the misestimate is the quality of the estimating procedure or unforeseeable external factors) are important enough to warrant some corrective action. Many DOD officials are not convinced that the participants in the Congress fully appreciate a manager's difficulties.

The perception exists within the Congress that pleas for managerial flexibility frequently are attempts to achieve independence from the policy controls of the legislature, which would allow undetected departures from the intent of the Congress. Many participants in the Congress are not convinced that DOD officials fully appreciate the roles of the Congress in this regard.

The setting out by line item of individual procurement items can be an important element in maintaining visibility for major controversial weapon systems. However, excessively detailed line iteming can impede managerial flexibility without significantly increasing the Congress' ability to review and control major issues. The current large number of line items included in the procurement title of the annual appropriations acts indicates that this is an area of significant potential for streamlining the budget consideration process, allowing a better focus for decisionmaking.

While we found the level of suspicion in the legislative branch to be high enough to cause us to doubt that agreement could be achieved on proposals to alter the level of detail of procurement line items, we do believe that discussions between officials of the two branches might lead to better understanding of the perspectives on both sides. Therefore, we have included an alternative that provides the basis for such discussions.

ALTERNATIVES

Reprogramming

5-1 The comptrollers of DOD, the military departments, and defense agencies, and the staff directors of each congressional committee with review authority over reprogramming could examine their procedures with the goal of minimizing the time needed for processing reprogramming requests without sacrificing time for informed decisionmaking.

Pros

1. The alternative offers the potential for developing new procedures that would streamline the process.

2. To the extent such new procedures reduce the handling time for reprogramming requests, they would reduce the length of time between determining whether to request repro ramming and final approval of the request.
3. To the extent such new procedures reduce the handling time for reprogramming requests, they would reduce the time that proposed give-up accounts would be on hold.
4. To the extent such new procedures reduce the handling time for reprogramming requests, they would either allow decisions at each level to be made on the basis of more current data, or reduce the amount of time and effort required for updating information for decisionmaking.
5. Earlier decisions to disapprove requests would pro ide managers with additional time to find alternatives to cope with the problem that prompted the reprogramming request.
6. Streamlining the process need not alter the current balance between managerial flexibility and congressional control.

Cons

1. Examinations such as this have been conducted from time to time at each level. An additional review might not result in improvements, and the time expanded on the review could then be considered wasted.
2. Opening the area for review might focus attention on the question of threshold levels at a time when new threshold levels have not been in place lon enough for full evaluation.
3. Excessive streamlining runs the risk of forcing decisions in too short a time for coordinated, information decisionmaking.
4. Such reviews might not address the more important matter of identifying ways to minimize the need for reporgrammings--for example, improvements in making accurate program cost estimates and projections, and the timing of congressional actions on the budget.
5. Speeding up reprogramming processing may reduce the incentive to plan and cost out programs accurately.

Congressional clarity and timing

5-2 DOD could request permission from OMB to submit its budget request with funding for pay raises (especially military) expected during the fiscal year in question. The Congress could provide what funds it decides are appropriate for pay raises as part of the regular annual budget process.

Pros

1. A budget submitted with accurate descriptions of the funding needed for expected events, including pay increases, would be a better statement of funding requirements.
2. Congressional consideration of the budget thus submitted would be conducted with full knowledge of the funding implications of pay raise issues.
3. By obviating the necessity for a pay raise supplemental later in the year, defense managers would be relieved of some of the uncertainty involved in managing programs without full knowledge of the resources that will be available during the fiscal year.
4. By obviating the necessity for enacting a pay raise supplemental, this alternative would free up time for the Congress at a particularly intensive point in the legislative year.
5. This alternative provides a way of increasing the recognition in the executive branch and in the Congress of the difference between military pay accounts, which contain little flexibility for absorption, and the "Salaries and Expenses" accounts of most civilian agencies with their relatively greater degree of flexibility.
6. Earlier determination of any absorption rate for pay raise funding would increase the options available to managers to comply with the directions of the Congress with a minimum of damage to approved programs. The later in the fiscal year defense managers become aware of the extent of absorption, the less flexibility they have to accomplish the absorption.

Cons

1. The level of pay raise that the administration will endorse is not known at the time of the January budget submission.
2. This might be viewed as an intrusion into the prerogatives of the pay board to recommend the pay increase, or those of the President to make an adjustment.
3. DOD has repeatedly made this request without success.

5-3 The Congress could attempt to minimize undistributed adjustments of all kinds and especially avoid the mandating of large absorption rates on pay raise funding.

Pros

1. While no strict rule can be expected on a subject of this type, this alternative is advanced as a rule-of-thumb that should be given consideration by all participants at each stage of the process.
2. Fewer undistributed adjustments would simplify the management task facing DOD when it has to use the reprogramming procedures to accommodate congressional directives.
3. The Congress would know the ramifications of its actions at the time they are taken rather than making decisions without knowledge of the adjustments DOD will have to recommend to comply.

Cons

1. From the point of view of the Congress, the knowledge of the ramifications of its actions, cited as a pro, might be seen as a con, as the members would have to acknowledge the ramifications of their action rather than having the ability to claim the fault lay with the DOD.
2. From the point of view of DOD there would be a reduction in flexibility in that it would not have the ability to use its entire decisionmaking process to determine the least disruptive way to comply with congressional directives.
3. In most cases, adherence to this alternative would result in decisions being made earlier in the process and, therefore, only on the basis of information available at an earlier point in the process.

Detailed line iteming

5-4 DOD could explore the possibility of developing, in cooperation with the appropriate committees of the Congress, an aggregation of some procurement line items along generic lines, which would maintain the separation of major, high visibility items, such as those covered in the Selected Acquisition Reports (SARs)[7], but combine less controversial items. The line item for each of these generic lines would still carry justification by type and quantity, and enactment by the Congress would still hold the executive to the quantities, types, and total cost within the generic line. However, reprogramming would not be required for amounts between elements within the generic type.

---

[7]Quarterly status reports from DOD to the Congress on major defense aquisition programs.

Pros

1. This would allow greater flexibility for DOD with a proportionately minor loss of control for the Congress.
2. Elimination of the time-consuming requirements of reprogramming review could allow earlier actions by managers.
3. The Congress would retain all the tools of oversight it now has, including SARs, notifications required by the Nunn-McCurdy Amendment[8], other mandated reports, and justifications.
4. This would free up the time the Congress now spends reviewing reprogramming requests that affect neither the quantity of procurement nor the cost of procurement within generic types.

Cons

1. When the actual costs for an item within the generic line become known to the Congress and are different than originally justified, there may be greater concerns about the integrity of the original estimate.
2. This raises questions that would have to be addressed concerning impoundment and deferral controls.
3. Such a change might require changes in accounting and funds control procedures.
4. The Congress might suffer a reduced ability to distribute funds geographically, but only for relatively small amounts.
5. There might be increased opportunities for "game playing" or for perceptions of "game playing."
6. There might be a reduction in the incentives for managers to find efficiencies to cope with problems within the limits of the resources provided.
7. Unless carefully structured, this alternative could lessen accountability to the Congress.

---

[8]A requirement of the 1983 Defense Authorization Act for DOD to notify the Congress of programs experiencing significant cost growth.

SECTION 6: TIMING AND WORK INTENSITY

STATEMENT OF STUDY AREA

This study area addresses the timing and sequencing of the major phases or steps in PPBS and the kind of workload associated with each part of the system. It examines whether the parts are completed on time and systematically, and whether the schedule and documentation requirements enhance (or crowd out) opportunities for useful analyses. The area is broad in scope, as it cuts across every stage of PPBS.

REASONS FOR STUDYING AREA

PPBS contains a great many procedural steps and decision "hurdles" that involve simultaneous interactions with earlier and later program cycles. The result is a complex and work-intensive system. Several previous studies on PPBS alluded to an overburdened process and suggested that one of the results was a lessening of the quality of the decisions. It was stated that the time needs for data collection and analysis were being restricted by the time requirements for assembling, reviewing, and justifying proposed programs.

RESULTS OF WORKING GROUP REVIEW

Our examination addressed a number of areas in which timing and work intensity issues had been identified, including factors external to DOD, such as congressional and presidential decision schedules, the relationship between programming and budgeting, the PBD process, and the annual cycle. We took note of the changes made in response to the streamlining initiatives outlined in the March 1981 memorandum from Deputy Secretary of Defense Carlucci. The initiatives include reducing the paperwork by 50 percent, eliminating many ZBB-type detailed formats, and generally reducing data requirements in PPBS. We identified conditions that may still unduly burden DOD staff, and focused primarily on the budget phase of PPBS, the phase that seems to be the most work intensive. While matters relating to programming were addressed, it was largely in terms of their connection to budget formulation. We also looked at how fiscal uncertainty affects execution and the entire PPBS.

PPBS--an interactive process

PPBS is highly interactive, due in part to cycle overlap, where different stages of the process are being dealt with during the same time periods. Therefore, it is very work intensive at certain times.

To appreciate the full implications of how the overall process works, it is essential to consider how the concurrent operations of several different years' cycles interact with each other and provide continuous feedback and updated information. To capture those interactions, a view of the system that conveys those interactions is provided in figure 9. This scheme portrays the PPBS phases as they occur in the 1981-84 period. The shaded horizontal boxes focus on the development of one year's program and budget (FY 1984) through its execution. The unshaded boxes are included to indicate the parallel efforts that are also underway, involving mostly the same people, on programs and budgets for other years.

The most significant aspect of this chart is the interconnecting vertical links among the different planning, programming, and budgeting cycles. Those links represent for one cycle, the continuing flow of information and actions that generate feedback or updated information to either earlier or later program/budget cycles. That flow of financial and program information is a basis for evaluation, correction, and redirection throughout the process. For example, the cross-hatched bar represents congressional decisions on the fiscal year 1983 budget during calendar 1982. Lines from that set of congressional actions indicate that those decisions affect the fiscal year 1984 programming, budget formulation, and budget justification; the fiscal years 1985-89 planning; and the execution of the fiscal year 1983 budget.

Those interactions are integral to the operation of PPBS, comprising the information flow that ties together the process on a continuing basis, but they also contribute to work intensiveness.

Recent steps

Although this interactive process is, of necessity, a work intensive process, steps can sometimes be taken to improve work procedures. This matter has been addressed by top DOD management of the Reagan Administration, leading to the improvements outlined in the March 1981 Carlucci Memorandum. As a result, the amount of material required for the POM process was significantly reduced. The Army POM for fiscal years 1985-89, for example, dropped in size from 4,800 pages to 750 pages. This reduction was largely accomplished through changes in the POM Preparation Instructions. In addition, there was a substantial reduction in workload, resulting from dropping ZBB requirements. This latter adjustment was often cited in interviews as providing increased time for analysis and greater refinement of the process.

Figure 9

DEPARTMENT OF DEFENSE PPBS INTERACTION NETWORK CALENDAR YEARS

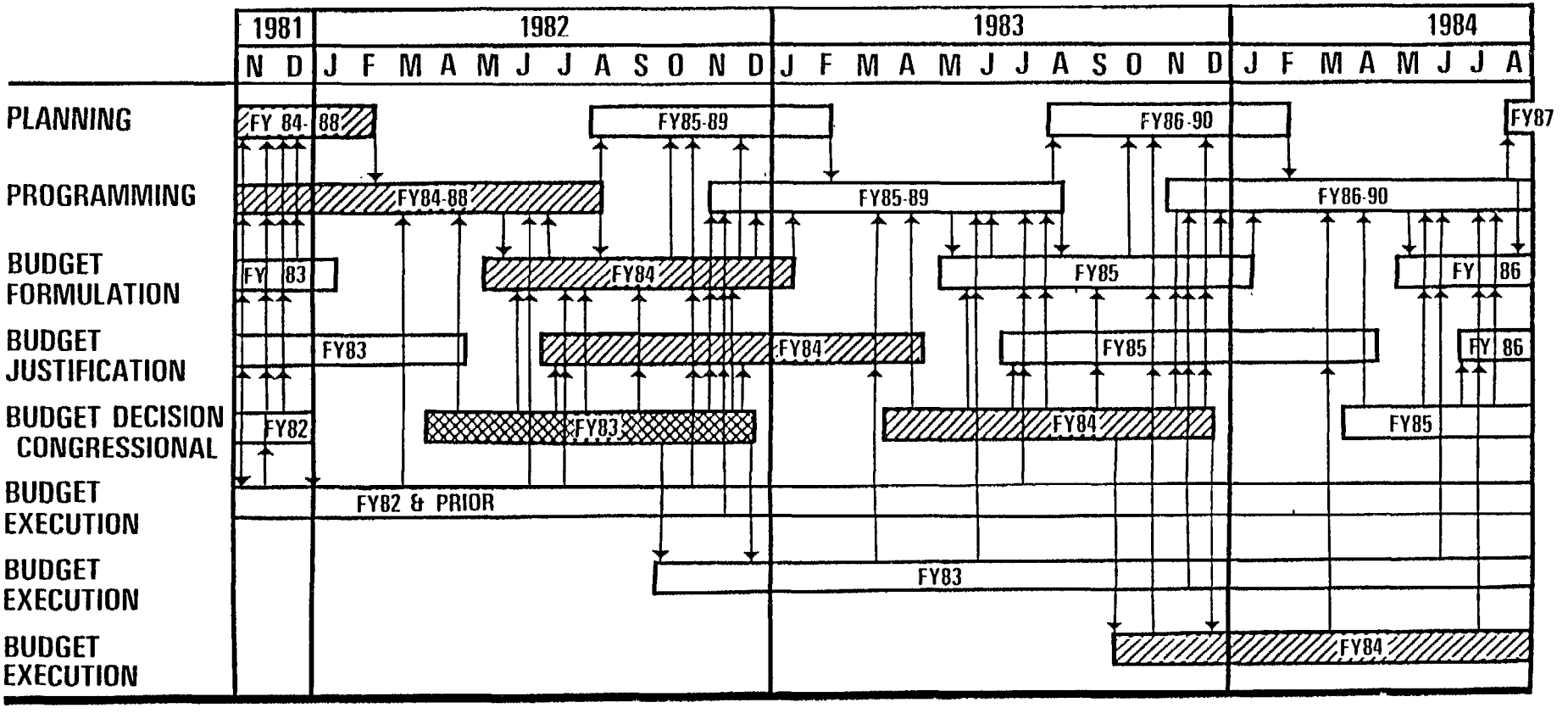

Also adding to the efficiency of the PPBS process were new cross-phase staffing approaches to planning and budgeting in the services. These changes are ongoing; however, there appear to be opportunities for further improvements. In some cases, congressional action may be required.

Continuing resolution authorities

Continuing resolutions or resolution authorities (CRAs) as they are called in DOD, were cited in our investigation as areas of some system stress. While the problem is not unique to DOD, DOD has had only one appropriations bill enacted before the start of the fiscal year in the last 5 years, and only three during the last 15 years. While it is recognized that CRAs are enacted to avoid the even greater problems that occur when funding authority lapses, they create problems because: (1) their termination dates do not coincide with the closing of any standard accounting period; (2) there is no well-defined and balanced spending plan; and (3) the department often has to operate under the previous year's funding level.

Historically, the termination dates of continuing resolutions have been set to accommodate the needs of proponents of the regular appropriations bill for a pressuring mechanism that encourages action on the regular bill. However, by setting a termination date that accommodates a legislative goal, the Congress creates unintended problems and expenses.

The most likely situation upon enactment of the CRA is that a fixed level of funding (usually the previous year's) will be continued until an appropriation is passed. This fixed level may mean (1) no new starts and (2) no ability to accommodate for natural increases in payroll, cost of living, degree of difficulty in R&D contracts, etc. Finally, the difficulty in calculating a base line from the CRA means delays in submitting reprogramming requests.

While DOD has been exempt from any shutdown requirements, it has still had to adjust to the special requirements created by CRAs and to the funding uncertainty involved in operating under them. The lack of well-defined and fixed spending plans results in

--difficulties for service headquarters and the field, who need ongoing fiscal guidance from headquarters.

--a series of "what-if" exercises in the attempt to reduce uncertainty by predicting possible CRA scenarios.

--a suspension of many activities, especially in the areas of procuring weapons systems (often day for day delays), maintenance contracts, and

repair contracts. Large annual contracts may be deobligated and renegotiated monthly, resulting in higher costs and severe disruption to those programs involved. Delays in contract award for combat readiness and other initiatives and delay or cancellation of combat training exercises are common. These can result in higher costs, decreased combat readiness, and increases in maintenance backlogs that may not be fully absorbed later in the fiscal year.

There have been some improvements in this area from sources both outside and inside the agency. The requirement that GAO sign the warrant for each apportionment under a CRA has been reduced to a single warrant for the entire CRA. In addition, DOD has developed a number of strategies to be used when CRAs cannot be avoided. While adjustment to CRAs remains a problem, it is now less serious than the true funding gaps, when neither the appropriation nor a CRA is passed.

Program phase and budget phase intersection

An unresolved issue concerning the intersection of the program and budget phases involves "revisitation" of program decisions during the budget process. Some participants (although definitely not all) were convinced that too many program decisions made during the POM review process were being changed unnecessarily during budget formulation in the absence of substantially changed conditions or gross errors in the original decision. This resulted in program uncertainty and the necessity to make adjustments late in the PPBS process. Supporters of the present system responded that "revisitation" was often the rallying cry for those whose projects had been properly adjusted during the budget process as a result of more recent information. They noted that deferral of program decisions until sufficient information was available was a proper exercise of discretion by the DRB.

A second group of critics pointed to the repetitiveness of the two phases. Similar exercises are being repeated in each phase without obvious additional benefit, and this causes the same programs to be addressed twice with similar documentation requirements. While these controversies may in fact be matters of perspective, these issues were so pervasive that they merit discussion.

One product of these perceptions of mismatch and overlap between program and budget phases has been the suggestion that the two phases be merged or

differently sequenced. The purpose of this merger would be to increase continuity between program and budget phases and to reduce the readjustment of program decisions.

PPBS cycle timing

Multi-year cycles for planning, programming, and budgeting were noted as possible mechanisms for allowing more time in which to effectively complete each phase. Generally, those activities most removed from detailed budgeting were put forth as candidates, e.g., programming or, more frequently mentioned, planning. Planners interviewed usually were not supportive of this approach.

Program Budget Decisions

The PBD process appears to be an object of controversy for many PPBS participants. These controversies center around the amount of coordination between decisions and appropriations. The PBD "decision unit" structure is basically appropriation-centered, and many participants see little apparent program- or mission-oriented analysis done during the PBD process. According to those participants, many time-consuming disconnects and revisitations occur where program and budget decisions are not well coordinated until late in the process.

ALTERNATIVES

Program phase and budget phase intersection

DOD could merge or differently sequence the program and budget phases of PPBS. This might be done in one of the following ways:

6-1 (a) Develop a POM of budget-level detail and quality and conduct a simultaneous program and budget review.

Pros

1. This approach appears feasible, as at least one service states that it builds its program in budget-level detail and quality.
2. Disconnects between programming and budgeting would be minimized.
3. Consolidation of two phases could create additional time before and after the program/budget phases. This would allow greater opportunity for analysis and evaluation in each process.
4. Each of the phases has similar elements that are often seen as unnecessary repetitions. These duplications would be eliminated.

Cons

1. The two phases could not be combined because they are basically distinct. While the budgeting phase deals with inputs, the programming phase attempts to allocate activities and resources to outcomes. In the latter, budget level detail is not generally required.
2. Some critics have charged that no program now generated is entirely of budget quality. If this is so, the creation of true budget quality POMs may be more difficult than was expected.
3. This would require major changes in the structure, timing, and organization of the program and budget review processes in all DOD organizations, especially in the Navy and OSD.
4. The production and review of such a mammoth product might be beyond the capabilities of OSD or the services, in that production of a POM and budget together could be much more difficult than producing them separately. Merging the two may diminish the quality of each.
5. Any extra time created by the merger to be used for increased analysis might be lost to the persistent growth of preparation requirements.
6. The present situation, with its options for alteration, provides an essential flexibility that a consolidated, more rigorous process might not. PPBS is required to function in a highly dynamic environment and, therefore, needs maximum flexibility.
7. A POM of budget-level detail and quality still would not relieve DOD officials of the requirement to present, defend, and execute a budget in an appropriations structure. Therefore, to prepare themselves, the officials would need the benefit of an appropriations-structured review.

6-2 (b) Reverse the programming and budgeting sequence, with budgeting done before programming.

In this alternative, programming would be partially combined with budgeting. The budget first would be developed based on last year's projections, with the less critical program issues being reviewed along with the budget. Then the major program issues would be addressed in November and December using the latest fiscal and political information.

Pros

1. In the present system, some major policy and program issues are left until the end of the PPBS cycle.
2. The major program decisions could be made with the benefit of up-to-date information, including the likely late passage of an appropriations act. As a result, they are "better" decisions.

Cons

1. The services would want to balance all of the program; they would not want parts of it decided in the budget and other pieces of it handled separately.
2. The progression of the planning to programming to budgeting linkage is a logical progression from less to more detailed decisions. It is a well-established approach and would be difficult to replace.
3. This alternative might lead to budget reviews of programs that are later dropped or greatly modified, thereby entailing wasted budget review effort. Also, a postponement of major program decisions until just before the President's budget must be submitted would limit OSD's opportunity for conducting a thorough budget "scrub" of the program decisions. This could permit last minute gamesmanship by some program proponents.
4. The allocation of activities and resources to outcomes should precede detailed decisions on outputs.
5. Current procedures are flexible and can accommodate program changes or initiatives made in the final budget review period.

PPBS cycle timing

Some cycles that are presently annual might be made multi-year cycles. This might be done in any of the following ways:

6-3 (a) Adopt a 2-year DG cycle with only a policy review and briefing of top DOD policymakers in the alternate years.

Pro

1. This would reduce the workload in alternate years.

Cons

1. A policy review and briefing would be nearly as labor intensive as a full DG review and might contribute to making decisions on the basis of less adequate analysis and study than in years of full review.
2. Planning personnel would not generally be in favor of the diminished input that would come with a biennial planning cycle.

3. Reaction to changing world situations would be slowed and attention to long-term planning reduced.

4. Such changes in timing could disturb the feedback loops that allow inclusion of congressional changes and guidance in the annual reviews.

6-4 (b) In addition to a 2-year DG cycle (above alternative), adopt a 2-year POM cycle.

Pros

1. This would reduce demands on staff and resources now needed for these cycles annually.
2. It would make additional time available for increased emphasis on execution, monitoring, and management.

Cons

1. Same as for alternative "(a)."
2. In the second year of a 2-year cycle, the program and budget time horizon would be shortened to 4 years.
3. The accurate estimation of expenditures is sufficiently uncertain that there would be too many changes (supplementals, reprogrammings, etc.) during the 2 years for efficient operation.

6-5 (c) Propose adoption of biennial funding in conjunction with a 2-year DG and a 2-year POM review cycle.

Pro

1. Same as in alternative "(b)," but with additional workload savings because of shifting to a biennial budget review.

Cons

1. Same as in alternatives "(a)" and "(b)."
2. The workload reduction of a biennial budget cycle might be less than expected, because the required "off-year" reviews and adjustments could consume significant resources.

Program Budget Decision

6-6 DOD could prepare the PBDs as a single consolidated document similar to a PDM.

Pros

1. Each appropriation could be coordinated across mission or program lines.
2. Program/budget disconnects would be reduced.

Cons

1. Generating a single document of budget-level quality would be difficult under current coordination procedures of OSD. The time and labor requirements appear to be several orders of magnitude larger than for the PDM, and the size and complexity of the resulting document might make it infeasible to handle as a unit.
2. Opportunities for service reclama would be compressed into the end of the cycle, and thus both that opportunity and the ability of OSD to consider and respond would be substantially reduced.
3. Holding decisions for later transmittal results in lost opportunity to detect problems and react before basing later decisions on the earlier, but less-than-satisfactory ones--leading to a pyramiding of problems or errors.
4. The flow of status reports (score sheets) and decisions taken during the review of each issue book means that the PDM is not in effect a single product, rather it is a consolidation of the preliminary decisions represented in the score sheets. In that sense, it is quite like the wrap-up PBDs.

SECTION 7: PROGRAMMATIC ANALYSIS OF OPERATING ACCOUNTS

STATEMENT OF STUDY AREA

This study area concerns the operating accounts--namely the operations and maintenance accounts and military personnel accounts--and how they are analyzed in PPBS program development for establishing output objectives and the required resource inputs. More specifically, the area concerns the steps that are being taken, or remain to be taken, to improve procedures for analyzing how various resource levels and mixes in the operating accounts can affect our armed services' capability for waging war.

REASONS FOR STUDYING AREA

Defense civilian officials and military commanders have known that increased or decreased budget resources properly applied to operating activities (e.g., to purchasing fuel for training exercises) can translate into increased or decreased fighting capability. Furthermore, they have routinely applied their military judgment in efforts to identify weaknesses and ways to ameliorate them.

Defense personnel have been less successful, however, in explaining their conclusions to the satisfaction of non-defense personnel, including the Congress. This became increasingly evident in the late 1970s when, with a post-Vietnam budget emphasis on acquiring new weapons systems, some observers wondered whether operating needs were being sufficiently analyzed and funded. It was in those years that the Congress, in statutes or committee reports, began asking for systematic DOD reporting on readiness trends and issues. It also asked DOD officials to better analyze how alternative funding levels and mixes in the operating accounts could affect readiness.

In response to such congressional desires, and parallel needs within DOD, Defense officials have significantly intensified their efforts to study and report on readiness and sustainability and related funding questions. In 1978, DOD submitted to the Congress its first annual Material Readiness Report, and in 1982 began submitting instead its more comprehensive Force Readiness Report (addressing both material and personnel matters). Within OSD's Office of the Assistant Secretary for MRA&L, the Directorate of Force Readiness/Sustainability Requirements and Analyses was established in 1981 to better address readiness and sustainability issues and serve as a catalyst in DOD for studying and addressing these matters. This Directorate in 1982

sponsored a DOD materiel readiness symposium, and in 1983 conducted the first, semi-annual Readiness Information Exchange. The exchange was a 1-day meeting at which OSD and service personnel held a briefing on the various analytical efforts underway.

In the military departments, several analytical studies and exercises (simulations, models, etc.) have been intensified or initiated to better measure readiness and sustainability needs and to identify related funding requirements.

However, several participants in PPBS as well as outside observers have stated that potential exists for further improvements in efforts to analyze and identify the effects of alternative funding levels and mixes in the operating accounts upon readiness and sustainability levels. It was with this in mind that the Working Group undertook an overview of ongoing analyses. This area is important because of the significant complexities of the issues involved and because the operating accounts include about half of DOD's budget dollars. Also, because operation and maintenance budget amounts are subject to short-term, fiscally-driven budget adjustments (because of their short-term spend-out patterns), it is desirable to understand how such adjustments affect readiness and sustainability.

RESULTS OF WORKING GROUP REVIEW

The Working Group is impressed by the efforts underway in OSD and the military departments to relate resource inputs in the operating accounts to readiness and sustainability. This is a complex matter, made difficult in part because not all operating account resource inputs can be readily associated with particular readiness or sustainability outputs. For example, dollars spent for base support activities have diffuse and difficult-to-measure effects on readiness.

This kind of problem appears particularly troublesome for the Army. The Army's very composition, made up of units of people equipped with a wide variety of large and small weapons ("equip the man" orientation), makes it very difficult to develop "resource input/program output curves" that extend beyond the obvious--e.g., the known dependence of manning and equipping levels upon available funding. In contrast, the Air Force or Navy operational organization around major weapons systems ("man the equipment" orientation) facilitates focus on aircraft "flying hours" or ship "steaming hours" programs

in studies of how resources affect readiness and sustainability. Such organizational and weapons systems problems shape the general direction and emphasis of each service's analytical efforts.

Each service has developed analyses and models to improve its PPBS treatment of operating account requirements. Some of the more prominent Army models or simulations are FORECAST, which projects manpower trends and requirements under alternative policies and fiscal constraints; the Army Logistics Assessment, which identifies materiel deficiencies affecting readiness or sustainability at various "time slices" (D-Day, D-Day plus 10, etc.); and the related U.S. Army Operational Readiness Analysis (OMNIBUS), used to assess the capability of the Army to mobilize, deploy, and sustain forces.

Navy efforts have placed initial emphasis on aviation units, while efforts are also underway to deal with the more complex ship materiel readiness question. The Mission Capability Model, currently being used in the program development stage of PPBS, permits predictions of the mission capability of aircraft units in the future based on inputs consisting of spare parts, component reworks, engine reworks, and intermediate maintenance activity production rates. In conjunction with that model, the Navy is exploring the applications for another modeling technique (SPECTRUM), which expands the existing analytical capability to cover sustainability of aircraft operations and to respond to alternative aircraft carrier deployment schedules. The ship materiel readiness research is aimed at long-term efforts to capture some casualty reporting system data and cost data as they relate to the multi-mission capabilities of Navy ships. The relationships between and among the several ship missions, weapons systems, and mission capabilities and cost constitute a formidable challenge to establishing resource-to-readiness relations with respect to Navy ships--hence the long-term nature of this effort.

Air Force systems include TOPLINE/TOPCAP models, which are similar to the Army's FORECAST model; the Logistics Capability Measurement System Overview (LCMS Overview), which relates numbers of sorties, by aircraft type and various scenarios, to funding requirements for spares, maintenance, fuel, and ammunitions; and the Air Force Integrated Readiness Management System, a development effort aimed at building by the mid-1980s an interactive, computer-based, decision-support system for addressing these matters.

Similar development efforts are being sponsored by OSD's Directorate of Force Readiness/Sustainability Requirements and Analyses and by the JCS. The JCS is sponsoring an Institute for Defense Analyses study aimed at establishing relationships between funding patterns and effects on Army unit readiness.

These analytical efforts and initiatives indicate that DOD officials are aware of the importance of this matter and are taking notable steps to address it. Nevertheless, the Working Group feels that certain matters warrant added attention.

Need for more comprehensive analyses

Considerable progress has been made in relating operating account resources to readiness or sustainability in particular areas, e.g., materiel or personnel. Each analysis, including existing models and simulations, is useful as an aid in setting funding priorities in that area. What is lacking, however, is a strategic design for developing more comprehensive analyses that systematically relate the parts to each other.

The absence of such analytical tools complicates the task of identifying, across the operating accounts and their parts, the best funding levels and mixes under alternative policies, force structures, acquisition scenarios, and fiscal constraints. Symptomatic of the fragmented approach is the bifurcated organization of DOD's annual Force Readiness Report to the Congress, which separately treats materiel and personnel readiness matters.

Admittedly, the difficulty in developing a broader analytical capability lies in state-of-the-art limitations in measuring readiness and in linking aggregate operating account inputs to discrete readiness or sustainability outputs. It is one thing to identify materiel or personnel shortfalls in specific locations; it is much more difficult to weigh the possible resource "fixes" to these gaps and determine the resource mix across and within accounts that produces the most enhancement in aggregate readiness and sustainability. In fact, the weighing of the various specific fixes, because it requires some resolution in, or reduction of, the inherent uncertainty about the ultimate application of those resources, may be considerably more difficult. However, the Working Group believes that progress has been made in addressing the conceptual and technical parts of this problem and that efforts can be directed toward such overall analyses. A first step would be to put together the results of existing analyses and treat them concurrently in PPBS

reviews focused upon cross-functional readiness. Treating manpower as an integral part of aircraft mission capability measures, for example, would be a step in that direction.

Need for more consistent applications of definitions

There appears to be inconsistent application within and across DOD organizations of the readiness concept or definition(s), which lessens the comparability of different analyses. With minor variations, the various statements of what constitutes readiness capture the following notion (from a February 8, 1982, memorandum of the Director, JCS Joint Staff):

> READINESS: The ability of forces, units, weapons systems, or equipments to deliver the outputs for which they were designed (includes the ability to deploy and employ without unacceptable delays).

A matter that came to our attention was uncertainty in the organizations on the period of war in which the readiness concept applies--D-Day only, D-Day plus a certain deployment period, D-Day plus 30 days, etc. Readiness and sustainability periods connect at various times, complicating the task of analysis. Further work in establishing common or more explicit guidelines could ease this impediment to better analyses. Other uncertainties concern the classification of certain activities. Are weapons system modifications de-signed to enhance performance and reliability best seen as modernization, readiness, or sustainability matters? Uncertainties in the use of the four pillars terms (force structure is the other term) are also addressed in this report's "Structure of Information" section.

Need for more summary resources-to-readiness information in the congressional budget justifications

The budget justifications contain a wealth of information and detail on program needs funded through the operating accounts, but lack a consolidated summary showing how the past, current, and proposed resource levels affect readiness and sustainability. The Congress, therefore, has both too much information and too little for assessing requests and actions concerning the operating accounts. This general information question is a long-standing matter of congressional concern.

This reporting limitation reflects the limitations of current resources-to-readiness or sustainability analyses and reporting within DOD. Therefore, little progress can be made on this until such time as DOD itself broadens its treatment of resources-to-readiness matters.

ALTERNATIVES

7-1 OSD could initiate and coordinate OSD-JCS-military department efforts to develop more comprehensive analyses of the relationship between different operating account resource inputs and the effect on aggregate readiness and sustainabity goals.

Pro

1. Could result in significantly enhanced analytical and reporting benefits to DOD and the Congress.

Con

1. The required concepts, weighting decisions, and aggregations may be so arbitrary or insensitive to real world complexities that the resultant conclusions and supporting statistics would be problematical.

7-2 OSD could develop, as permitted by DOD progress on the first alternative, summary information for the congressional budget justifications on the effect of operating account dollars on overall military readiness and sustainability. This would provide an overview "forest" viewpoint to complement the current detailed focus on the "trees."

Pro

1. Would satisfy congressional information requests.

Con

1. Would not be feasible to implement until progress is made on the first question.

The report's "Structures of Information" section contains an alternative that addresses uncertainties in the four pillars terms.

SECTION 8: COMPATIBILITY AMONG MANAGEMENT INFORMATION SYSTEMS

STATEMENT OF STUDY AREA

PPBS decisionmaking and management processes are dependent on the availability of appropriate, accurate, and timely information. Data used in PPBS are aggregated from accounting and management information systems operating at a variety of levels throughout each service. Many of these systems were developed to serve the management needs of operating units in specific functional areas, with little attention paid to compatibility with other systems.

This study area concerns the major financial and programmatic management information systems that provide data for PPBS. It includes a look at the way DOD manages the flow of information from the field to service headquarters; the points at which data are aggregated; the extent of standardization or compatibility of contributing systems; and the current configuration and planned changes affecting information technology supporting this flow. Relatedly, the flow of PPBS data from the services to OSD is of interest.

At the service headquarters and within OSD, the compatibility of the information systems supporting the various PPBS phases can significantly affect the capability of linking the phases of PPBS. The information flows at headquarters and the information technology supporting those flows are also part of this study area.

REASONS FOR STUDYING AREA

This issue area is of relevance for the entire PPBS process, including the execution phase. Each phase of PPBS decisionmaking makes use of much common data. Information may be aggregated, displayed, reported, and analyzed in different ways at different points in the decisionmaking process, but these are essentially alternative ways of looking at the same basic information.

While the evolution of many of the supporting systems lies beyond the scope of PPBS, changes to these systems may have significant implications for PPBS. Rapid changes in information technology have direct implications for all these systems. Thus, it is important that there be PPBS personnel who are responsible for coordinating plans and initiatives for changes in the supporting management information systems with plans for PPBS changes.

To the extent that supporting management information systems are based on different accounting concepts, on non-standard basic data elements, and on

incompatible information technologies, problems are posed for efficient and effective management of the PPBS process. PPBS observers have identified reliance on multiple, non-uniform accounting systems as a major problem in some of the services, as well as the fact that many of these systems were not fully automated, and information transfer was in many cases done manually. Where major incompatibilities exist among systems supplying basic PPBS data, the amount of work and time required to produce the information needed for higher level decisionmaking and management control is likely to increase and, simultaneously, the accuracy of information obtained is likely to decrease.

An additional reason for examining this area is based not on perceived problems, but on the opportunities for improvements in PPBS that can result from more extensive reliance on up-to-date information processing technology. The continuing revolution in information technology, linking the areas of data processing, communications, and office automation, makes it possible to develop a network of geographically dispersed users who can enter, edit, transmit, and audit data directly. Large volumes of data can be handled in modern management information systems that can be used easily to meet the information needs of many managers and analysts. Such systems can include a wide variety of analysis functions and report and graphic presentation options that can be used interactively.

Realizing the potential offered by current technology requires significant planning and coordination of efforts to improve PPBS support systems and related development efforts centered elsewhere in DOD. Attention must also focus on identifying the information needs of all key PPBS participants, whether decisionmakers or action officers, in each phase of PPBS. The development of a common framework identifying information requirements of a PPBS information architecture is an important step towards a more comprehensive and integrated approach to information system development and management.

Because of the resources that will be required to sustain development and coordination of information resource management activities that cut across a number of functional areas, top level sponsorship and support is considered critical for successful efforts. This type of support is consistent with other government-wide initiatives, such as the Paperwork Reduction Act of 1980 and the 1982 Federal Managers' Financial Integrity Act. These acts mandate top-level management attention to information resource management issues and to developing greater compatibility among supporting systems.

RESULTS OF WORKING GROUP REVIEW

Current systems

Throughout our discussions in each of the services and in OSD, it was widely acknowledged that it is important to move toward greater reliance on compatible management information systems, based on state-of-the-art technology, that could be linked, as appropriate, to provide information needed for PPBS decisionmaking. In each of the services, a number of initiatives are aimed at improving available information technology and establishing networks permitting real time access to a variety of users. The current status of these efforts, the basic approaches to development, and the relationship of these projects to PPBS differs significantly from service to service, reflecting traditional service approaches to systems development and control.

From our interviews and investigation of information flows to PPBS in each service, several general observations can be made. Given the time constraints on the effort, our mapping of information flows was necessarily only suggestive and not comprehensive. The Working Group looked at information systems used in PPBS for the flying hours, depot maintenance, and active force programs. The systems that produce these data are developed and controlled by the functional area that has management responsibility. The age and sophistication of these systems varies among the functional areas within services as well as across services. Similar variation is characteristic of the existing plans for upgrading or replacing systems. In some instances, master plans for system modernization have been developed, while in other cases it was not possible to identify any systematic plans for change.

Each service does have major projects underway to improve financial management and accounting systems, moving toward greater standardization and redesign of supporting information technology. In some of the services, the plans for these projects explicitly recognize the current lack of compatibility among accounting systems, and the resulting problems.

At the headquarters level, each service has developed a system that produces a single authoritative data base that seeks to integrate programming and budgeting information for the service portion of the FYDP. The Air Force Automated Budget Interactive Data Environment System (ABIDES) is currently the most comprehensive system. ABIDES is a user-friendly automated system with the capability to perform all budget functions, including formulation, justification, and execution. While additional capabilities are still being

developed, the Air Staff is currently using the system to support many users interactively. When completed, ABIDES will also provide a direct link between programming, budget, and accounting data. Direct access to the system is currently available to users throughout the Air Staff via the classified headquarters network. As the telecommunications network linking headquarters with the field is completed, access to ABIDES will be extended to the major commands.

The Air Force system is mentioned illustratively. While direct access to the program and budget data base is not as widespread in the other services, they are also moving in that direction. The Navy is in the middle of a system development project designed to produce a new Navy Headquarters Budgeting System, which will take advantage of data processing, word processing, and communications technologies to fully automate the budget process and link it to programming data bases. In contrast to the Air Force system, which uses existing Air Staff computer and communication resources, the plans for the Navy system envision the procurement of a mini-computer and a network of micro-computers to serve as a dedicated system for the Navy budget system.

The Army is in the process of developing an Army Headquarters Integrated Office System that will serve as a network for information sharing and administrative support, linking together existing capabilities for data processing, office automation, and communications. Because the project focuses on developing a capability for linking together a variety of existing, currently incompatible, hardware, it represents a different approach than that of either Air Force or Navy. Initially, the network will be unclassified and therefore of somewhat limited direct utility for PPBS processes. The Army has also recently established a study group to prepare an information architecture.

Characteristics of the supporting information technology represent an important consideration in developing systems to support PPBS processes. As PPBS participants assess their needs for new management information systems and plan for their development, it is important that they be fully aware of plans for development in the support technology.

Developments in the functional area management information systems also affect PPBS. Even where these systems do not currently link to PPBS, it is helpful for systems planners of PPBS to know what is happening in these areas. As program execution becomes a more integral part of PPBS, attention to these functional systems must increase. Because information flows and

linkage in PPBS are highly dependent on developments in the functional areas and on the state of existing support technology within the services, coordination of system development plans is of great importance.

Continuing opportunities for improvement

The Working Group found evidence that the lack of compatibility among management information systems has created problems, often hindering rather than facilitating the timely flow of information required for PPBS decisionmaking. Each service has shown some awareness of these problems and has initiatives underway to address needed improvements in a variety of related areas. However, there is a need for much greater coordination of these plans and initiatives.

These efforts need more visibility outside the initiating office. We frequently found that people in one office had little or no knowledge about related projects in other offices. There needs to be some institutional focus for PPBS information resource management, with top level support and sponsorship, that takes a systemic view of PPBS information needs and support system architecture.

The Air Force has moved farthest in the direction of providing support for the broad coordination required among functional managers and system specialists in developing integrated information systems. In April 1982, an office was established for Air Staff Information Management Systems (ASIMS). This office is attached to the Office of the Vice Chief of Staff and has major responsibility for developing a more comprehensive and integrated approach to information system development and management, for providing policy guidance, and for overall Air Force planning in this area. While PPBS pulls many of the information needs together, it is not the sole focus of ASIMS. ASIMS also has responsibilities to the functional areas needing information systems for their own management in addition to providing data to PPBS. The objective is to help the individual offices coordinate plans for systems that will do both.

The need to achieve compatibility and facilitate linkage among management information systems supporting and providing information for PPBS will continue to be a significant issue. Technological change will continue to offer new opportunities for improving the organization and management of information required for PPBS decisionmaking. The services and OSD need a better way of planning and coordinating for changing information needs and the support systems and technology that can best meet those needs.

The Working Group believes that greater coordination of management information system issues is needed for the entire PPBS process. PPBS participants with information systems development responsibilities need to be familiar with the information needs, existing systems, and development plans for PPBS. Also with the needs of the functional areas with systems providing data for PPBS and with those of the computer and system development specialists who provide support for PPBS. Coordination across these areas maximizes the possibility of synergistic benefits.

ALTERNATIVES

8-1 Greater cooperation on questions of information system design could be encouraged among offices with PPBS responsibilities by establishing mechanisms for sharing information on developmental plans. Current regulations on information system acquisition and/or development plans could be reviewed to ensure that they promote needed coordination.

Pros

1. This alternative represents the smallest change from the status quo.
2. It requires the least commitment of additional resources.

Cons

1. This is the least likely to result in any of the needed improvements.
2. The offices may not place it high on their list of priorities.

In conjunction with the first alternative, further coordination could be achieved by one of the following three alternatives.

8-2 The importance of the information resource management approach envisioned in the Paperwork Reduction Act (PRA) could be underscored. The service organization charged with PRA functions could be given special responsibility and resources for coordinating information systems support for PPBS as a subset of its more general activities.

Pros

1. This alternative builds on the efforts of other groups whose general mandate directs attention to similar issues on a broader scope.
2. In some instances it might avoid unnecessary duplication of effort.

Cons

1. Because initiatives under the PRA seem to be just getting underway, it is difficult to determine how promising such an approach might be. PPBS particiants, for the most part, are not familiar with the PRA initiatives, particularly those in the information resource management area.

2. There is a danger that the focus on PPBS might not retain a high priority for a group concerned with all types of information needs and systems on a service-wide basis.

8-3 Offices that focus more generally on coordinating plans and developing management information systems could be assigned special responsibilities for systems supporting PPBS. Several offices have been created to focus on management information systems, which might serve as models. While PPBS is already included in the scope of responsibility of these offices, as the primary system for defense resource allocation, it could be given special attention.

Pros

1. The scope of responsibility for tnese offices includes management information systems that provide data for PPBS but are not part of PPBS. Personnel management systems are an example.
2. It may be easier to coordinate PPBS information needs with developments in other functional areas if responsibility for coordination is housed together.

Cons

1. The offices may see this responsibility as secondary to their other duties.
2. The offices may not look closely at service-wide information needs, focusing their decisions on, or favoring, their own particular needs.

8-4 Establish a PPBS information system staff in each service and in OSD as a part of the office of a high level official. This would be a small staff with responsibility for addressing issues that affect PPBS as a whole or cut across phases. Primary responsibilities would be to coordinate development plans for information systems, supplying data for PPBS decisionmaking, and ensuring effective linkage between PPBS phases in those plans.

Such an office would not have operational responsibilities, but would focus on coordination of the different process, functional, and technological considerations that are relevant for making decisions about support systems. It would have responsibility for examining information needs of PPBS participants and developing a PPBS information architecture and a PPBS Information System Plan, including the PPBS linkages with the various functional and operational systems. It would also be concerned with promoting data quality control standards. In short, the staff would facilitate the identification of PPBS information needs and help identify the most promising means of providing for them from various sources throughout DOD.

Pros

1. Provides a systemic view of PPBS and of the supporting management information systems, thus facilitating their coordination and integration.
2. This staff would maintain an overview of PPBS information flows, both vertical and horizontal, and of the information technology supporting them.

Cons

1. This could add a potentially redundant staff activity.
2. A high-level information system staff that is not involved in the day-to-day operations of PPBS could detract from the user orientation, end-use design, and requirements origination.

8-5 The existing PPBS information structures and information systems need a major review. As a first step, a review of the uses and adequacy of existing PPBS data bases and of the information flows that provide the data could be conducted as a basis for defining the broad information architecture needed to support PPBS. A PPBS Information System Plan, linking information needs to a support system architecture, could also be developed.

Pros

1. Focuses on information needs of PPBS decisionmakers and analysts.
2. Links decisions about structures of information to those decisions concerning support technology. Such a review could be conducted concurrently with a department-wide review of the FYDP (discussed on p. 60).

Cons

1. Conducting such a review and articulating a plan could take considerable time and money and could be duplicative of recent studies.

SECTION 9: MANAGEMENT REVIEW, EVALUATION AND FEEDBACK

STATEMENT OF STUDY AREA

Sound management involves establishing program goals, translating these goals into annual performance objectives, providing resources for these objectives, tracking financial and program performance, comparing actual program performance against planned objectives, and making appropriate changes.

This study area focuses on how management reviews and evaluations are accomplished and fed back to decisionmakers in PPBS. It includes consideration of the systems, records, and reports used to review accomplishments in PPBS. Additionally, it examines the mechanisms and procedures for ensuring that the results of those reviews are fed back to inform and facilitate future PPBS decisionmaking. In practice, management reviews and evaluations are carried out by many groups using many methods, including auditing, investigating, inspecting, testing, comparing, and modeling.

REASONS FOR STUDYING AREA

A frequent criticism of PPBS is that insufficient attention has been devoted to the execution phases and to the review and feedback procedures required to strengthen it.

Some PPBS participants and observers suggested that, historically, PPBS has emphasized resource allocation and has given too little systematic attention to the evaluation of program execution and control. Exceptions to this generalization are large, expensive weapon systems and programs that have high congressional visibility. PPBS has never had an explicit measurement system for systematically reviewing the progress made in implementing approved programs and linking goals and objectives to performance standards. The audits, reviews, and evaluations of field activities regularly used by PPBS participants focus largely on financial results, including variations from planned obligation and outlay rates and the reasons for additional costs.

Critics argue that analysts need to be better able to assess program outputs and accomplishments against given levels of resource inputs, and that financial and management accounting reports need to be tailored to produce the kinds and levels of information on program outputs that will enable management to relate achievements to goals and objectives. In addition, the need to

increase uniformity, timeliness, and relevance of military departments' management information and financial accounting systems has long been recognized.

Classical models of financial management recognize it to be circular and to comprise planning, programming, budgeting, execution, and review phases; the latter tying into the planning and/or programming phases of future cycles. This suggests that review and feedback mechanisms should be important elements of PPBS. The size and complexity of DOD and the competing demands for limited resources further emphasize the importance of review and feedback as an area of study.

RESULTS OF WORKING GROUP REVIEW

The Working Group's interviews and discussions were confined to the headquarters staffs and secretariats. They focused on the flying hours, depot maintenance, and active force programs, excluding acquisitions, as a way of obtaining an overview on how management reviews and feedback were being performed. In addition, because audit agencies and Inspectors General offices perform important management control and information quality assurance functions, the related responsibilities of these offices were also considered.

Recent initiatives

OSD and each of the military departments have taken steps to increase their emphasis on program execution and control and on the integrity of data used in PPBS. This recent emphasis is in response to management's desire for better information as well as to prodding by GAO and various congressional committees. Other related influences include the Inspector General Act of 1978, as amended by P.L. 97-252; the Federal Managers' Financial Integrity Act of 1982; and GAO's separate work on DOD's audit activities. Some of these efforts are described.

Three initiatives in the Army are particularly noteworthy for their potential effects on review, evaluation, and feedback in PPBS. First, the Program Performance Budget Execution Review System (PPBERS) was started in 1981 as part of the overall Army effort to put "execution" into PPBS. PPBERS, a macro-level review of execution related to the eight Army functions, uses existing management reports to compare, on a quarterly basis and for various Army programs, actual program results with objectives set a year in advance. It is the first major combined effort among comptroller, program,

functional, and secretariat staffs to look beyond the resources expended and into the questions of what the Army is getting for these resources and if this performance is consistent with approved plans. Presentations are made to the Select Committee, a joint secretariat and staff policy council, by the Lieutenant Generals responsible for each of the eight functions, and the results of these reviews are fed back into the formulation and execution phases of PPBS. As PPBERS evolves, the quarterly objectives should tie more closely to the seven Army goals, the subject of the second Army initiative.

Since 1981, the Army has adopted a goals and objectives orientation in its management. The Army leadership has agreed upon seven broad goals and a series of supporting objectives. These objectives are being translated into annual action plans to be used by "goal-tenders" in reporting on results. The Army plans to integrate goal setting, the resource management aspects of PPBS, with the program results that are reported quarterly under PPBERS. Once these efforts are institutionalized, the Army will have the main features of a classical model of financial management.

The Army's third initiative was to identify reports originating either in headquarters or in the field that support PPBS. This is the first step in an effort to improve the timeliness, accuracy, and validity of execution reports.

In the Navy, the major evaluation of program execution within PPBS occurs in the course of the annual detailed budget review that precedes the budget submission to OSD and OMB. Participation in that review by the programming staff provides the link back to the programming phase of PPBS. The Navy headquarters' staff also systematically consider audit findings and recommendations as a regular part of their budget review.

The mid-year budget review, during which the Financial Management Division and Major Claimants[9] closely examine the operations accounts, is one of numerous reviews conducted under the general auspices of the Chief of Naval Operations' (CNO) Directorate of Navy Program Planning. This office exercises centralized supervision and coordination of the Navy program planning and study efforts to ensure the integration of planning, programming, budgeting, and appraisal of execution. The functions of this office include evaluating

---

[9]Major Claimants in the Navy's PPBS refers to all Navy commands, bureaus and offices organizationally outside of OPNAV, who receive a share of the Navy budget and distribute it to their subcomponents. (Also see p. 163.)

program progress; identifying gaps or duplication of efforts; identifying problems with schedules or cost thresholds; and recommending corrective actions to program sponsors and the CNO.

The Integrity and Management Improvement Program, a 1981 Air Force-wide initiative, is designed, among other things, to re-energize the Audit, Inspection, and Investigation Council; to shift Air Force Audit Agency and Inspector General emphasis from compliance reviews towards management and combat-effectiveness reviews; and to implement systems for tracking and follow-up of audit findings and recommendations. Furthering the Air Force emphasis of execution feedback, the Operating Budget Review Committee (OBRC)--chaired by a general officer with members representing major diverse functional elements--was formally integrated into the Air Force Board Structure. One benefit is that the OBRC is now better placed to ensure that ongoing operating problems are recognized during POM development.

In addition, the Director of Budget, Air Force, has begun to receive synopses of audit reports having dollar impacts. The Office of the Comptroller, Air Force, is developing computer software to track individual audit findings with dollar impacts and to provide that information to budget analysts during budget formulation. Another significant recent innovation is the ongoing expansion of the Budget Review Board function to include the review and resolution of major execution-year problems.

Last year the Inspector General of the Department of Defense, for the first time, was afforded the opportunity to enter issues into the POM process. This office also is aggressively engaged in building its audit oversight and evaluation activities, as well as a timely and effective audit resolution process that has the potential to serve and improve the information needs of both DOD and responsible legislative organizations.

The services and OSD perform routine management reviews in the normal conduct of business. In addition, the services and OSD audit agencies and Inspectors General provide various independent audits, inspections, reviews, and program evaluations to determine the adequacy and effectiveness of many management practices, procedures, and controls within their departments. These reviews and inspections fall into three categories: (1) financial and compliance, (2) economy and efficiency, and (3) program results. They are usually scheduled in advance, however, some are unscheduled and may be done recurringly or non-recurringly for single and multiple locations. Audit and

inspection reports issued as a result of such reviews and investigations provide recommendations to various levels of management within each department and OSD for improvements.

In addition, the Army and the Navy have internal review personnel and analysts with responsibility for assuring the validity, timeliness, and accuracy of financial and functional systems and reports. They have the responsibility to support management's needs for timely, accurate, and complete information in the flying hours, depot maintenance, and active force programs.The service headquarters' staffs, which primarily have funtionally oriented analysts, receive numerous monthly reports on program performance, as well as obligations and disbursements that show actual progress against planned program expenditures and outputs. They give analytical attention and make evaluations of these reports, through computer-based or manual management information systems, to identify whether or not programs are running according to plans. Also, the Inspectors General and the audit agencies in each service frequently are asked to evaluate segments of a program. The results of these efforts, plus military judgment, expertise, field visits, and regular communications, serve as a basis for identifying variances, changes, perturbations, shortfalls, and other execution problems and their related causes. These are fed into the POM and budget formulation processes by program sponsors and their management review team functional specialists.

While such efforts provide management with information necessary for program segment evaluation, they generally do not provide aggregate data for evaluating entire programs. Moreover, the data sometimes are not provided to key PPBS decision points in a timely manner.

Need to assure comprehensive review of data supporting PPBS

While these important management reviews and evaluations are useful, the currency, accuracy, and completeness of the reported data are not always assured. During interviews with PPBS participants conducting these reviews, the lack of assurance, or knowledge, about the quality of information was frequently noted. It was our observation that, in this respect, insufficient emphasis has been given to systematic reviews of major reports supporting PPBS decisions and/or the systems that generate these reports. Such reviews could better utilize the results of the regular audits made of organizations responsible for gathering and reporting such information.

Need for more coordinated and integrated approach to review and feedback

Many PPBS participants are regularly involved in myriad execution reviews, evaluations, and feedback to decisionmakers. However, we believe that a more comprehensive system for coordinating audits, reviews, and evaluation activities of each service and OSD is needed to provide more direct and timely support to PPBS participants, including the top DOD executives involved in PPBS.

Many of the reviews and evaluations that we were told about tracked the dollars spent for programs, but usually did not emphasize outputs in relation to either annual program objectives or longer range service goals. While these reviews provide valuable information for a segment of a program, they do not furnish complete data to evaluate the total program, make appropriate changes, and link the results to future plans and budgets.

Other reviews and evaluations are carried out by functionally organized staff in the day-to-day conduct of their duties. Both financial and functional reviews and evaluations at the service levels cover portions of programs or activities. They are often furnished to key PPBS participants in fragmented form, not directly related to their resource allocation decisionmaking responsibilities, and out of phase with the PPBS decision flow. Further, during our interviews with PPBS participants conducting these reviews, the absence of cross-functional reviews was noted. These oversight and review activities, although conducted by individuals who do not have direct responsibility, are divided along functional lines.

The audit and internal review organizations constitute a resource for cross-functional evaluations and reviews but do not have the insight of the key PPBS participants into the most beneficial areas for such reviews. Given the many initiatives underway, it seems to us that the time is right to undertake more financial and functionally coordinated reviews of the results of programs in their entirety. Such reviews should address

- --whether program operations utilize resources economically, efficiently and effectively;
- --whether objectives are being met; and
- --the extent to which alternative ways of meeting these objectives are being considered.

These broad reviews should be timed to feed into the program review and budget formulation and execution phases of PPBS.

ALTERNATIVES

9-1 OSD and each military department could increase the initiatives to monitor and review performance and budget execution in terms of outputs and goals. Note should be taken of the Army's experience with PPBERS.

Pros

1. A basis for comparing actual program accomplishments with plans would be provided.
2. A basis would be provided to determine what the services are getting for the dollars spent and if this is consistent with approved plans.
3. An improved base for program and budget reviews and PPBS decisions would be supplied.

Cons

1. The lack of standard output measures for all major programs may inhibit full implementation.
2. Such a process could be time-consuming.

9-2 OSD and each military department could require selected PPBS committees and working groups to work with the audit agencies and internal review offices to develop more comprehensive audits, reviews and evaluations having significant implications for decisions in PPBS.

Pros

1. Aggregate data would be provided for evaluation of entire programs.
2. Top DOD executives would be provided with focused, independent reviews of programs and broad areas.

Cons

1. More assignments would increase the workload of audit agencies and internal review organizations, possibly resulting in some cutbacks in other audit areas.
2. Some audit and internal review personnel may not have the skills and expertise for more comprehensive reviews. A training effort may be necessary.

9-3 OSD and each military department could initiate reviews to improve currency, accuracy and completeness of the major recurring financial and management records, reports and the related information systems used to support PPBS decisionmaking.

Pros

1. This could assure that data used by the service headquarters' staffs are generally timely, accurate and complete.

2. The need for timely, accurate and complete data would be emphasized, thereby providing an incentive for those producing such data.
3. An opportunity would be created to identify unique needs and formats, as well as common needs and formats for reporting.
4. A baseline would be provided on which to judge the regular flow of data in terms of timeliness, accuracy and completeness.
5. Better coordination among cross functional activities could result.
6. Some relevant audits and reviews that are already being conducted could be used for this purpose.

Cons

1. Receipt of data by the service headquarters staffs during periods of review could be delayed.
2. Other ongoing efforts may have to be deferred.

CHAPTER 4: AN AFTERWORD: SOME MANAGEMENT IMPLICATIONS OF A CHANGE IN THE APPROPRIATION ACCOUNTS

As the Working Group reviewed the results of its studies, a cross-cutting theme emerged. This theme is the difficulty in relating the output orientation of decisionmaking, so necessary for broad policymaking at the national level, to the input orientation used for purposes of management and control at the budget level. While President Truman was correct when he observed that "Strategy, Program, and Budget are all aspects of the same basic decision," the functions involved for each aspect are different.

The great challenge facing the resource allocation decisionmaking process of any large organization is relating desired outputs to needed inputs. Large organizations, including government departments, must request, obtain, and then manage budgets in terms of things, while these things and their activities are applied to reaching goals and objectives.

Figure 10 displays why relating outputs and inputs can be difficult. As the commodities shown on the top line of the chart contribute resources to units on the second line, these units contribute capabilities for the activities shown on the third line. Each of these lines displays relatively finite, measurable elements contributing to warfare missions. However, as shown by the bar of demarcation between the third and fourth lines, the outputs of these activities are mission capabilities which are essentially abstract and difficult to measure. Building from inputs, which we call commodities on the chart, to warfare missions may be difficult, but tracking missions to commodities is more difficult.

Many observers have recommended a change in the appropriations structure now used by the Congress for enacting budget authority to facilitate a change in focus for its decisionmaking. We do not believe that the ramifications of such a change have been adequately considered in the literature. Therefore, we offer the following comments for consideration.

Figure 10

DEPARTMENT OF DEFENSE RELATIONSHIPS AMONG ORGANIZATION – MANAGEMENT – RESOURCES

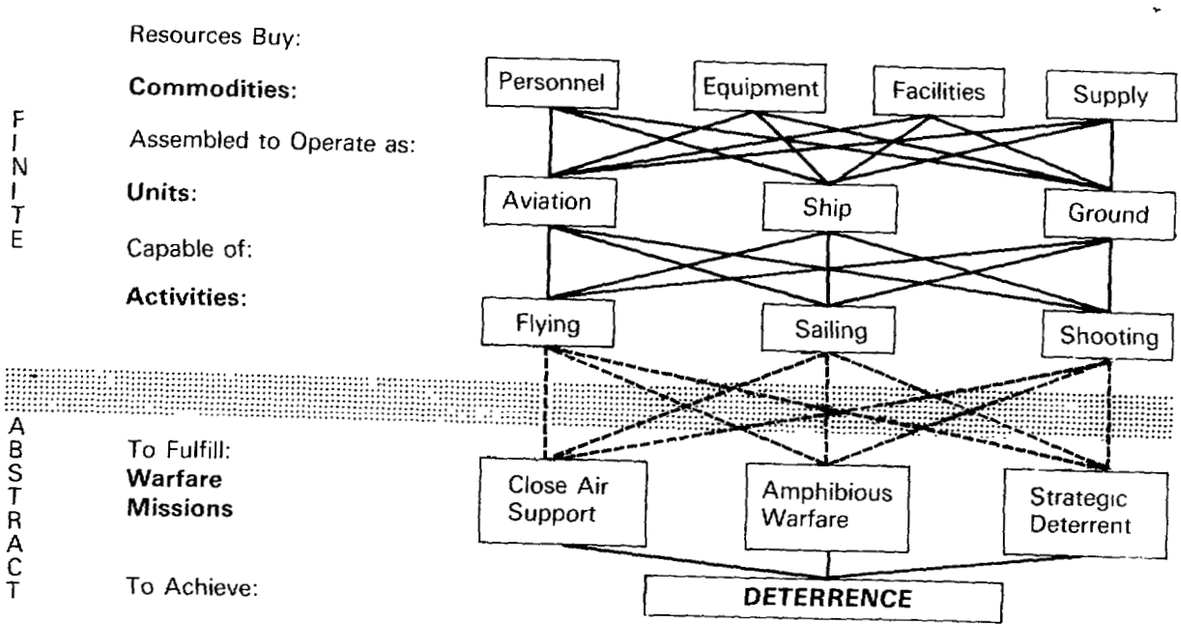

SOME HISTORICAL BACKGROUND

During the first few decades of this century, there were great advances in executive branch budgeting. With the adoption of the Budget and Accounting Act of 1921, the President gained control over executive branch budgeting activities. Before that the chief executive officer of each agency communicated his own estimates of required spending authority directly to the Congress without presidential review.

The crisis of the great depression in the 1920s and 1930s saw the creation of new departments, bureaus, and agencies with greatly expanded functions and budgets. World War II placed great strains on the total resources of the nation, including the fiscal resources of the national government. During the late 1940s and the early 1950s, in response to these developments, the concept of "Performance Budgeting" was advanced by many influential groups, notably the First Hoover Commission. While "Performance Budgeting" had its major effect on the domestic agencies, the debate over the concept's concentration on outputs helped to focus attention on the challenge of relating inputs to outputs in the field of defense.

PPBS was a major advance in the effort to meet this challenge when it was introduced into the DOD in the early 1960s. Its basic concept of planning, developing a program to achieve the plan, and budgeting for the resources necessary to implement the program, provided a bridge between output questions and input questions.

The 1970s saw the development of the "Mission Budgeting" concept with the report of the Government Procurement Commission and the passage of the Congressional Budget and Impoundment Control Act of 1974. The act, among other things, required the President to submit his budget displayed in terms of national needs, agency missions, and basic programs. Many of the proponents of that act's requirement believed such a submission would result in a much more detailed display of missions than turned out to be the case. They had hoped a more detailed display would provide the Congress with the explicit link from well-defined missions to inputs being requested for their accomplishment.

PPBS IS DOD'S TRANSLATION SYSTEM

For government departments that develop long-range plans in the relatively abstract terms of goals, capabilities, or even activities, but which must budget in concrete terms, the point at which the translation from outputs to inputs is made can be critical to the ability of departmental decisionmakers to obtain, review, and act on information that is relevant to the decision at hand. That translation must be made at some point, for no institution can request, obtain, and execute a budget totally in abstract terms. To be executable, a budget must be concrete, and so the Congress grants budget authority in dollars. To be controllable, the purposes to which those dollars are directed usually are expressed in terms of things--purchases, salaries, construction, etc.

DOD has dealt with the translation through PPBS. Its FYDP data base includes the appropriations account information for each of the PE's, allowing easy translation for DOD officials. In PPBS, DOD has a system that could accommodate practically any appropriations account structure the Congress wished to use. But, it is not able to make a complete translation from its strategy to specific programs and back again without dealing explicitly with gaps between strategy and resources and the risks associated with these. (See the discussion in chapter 3 on planning and its linkage with programming.)

THE DIFFICULTY FOR THE CONGRESS

Many observers question the success of the Congress in finding an effective process for its own translation. The difficulty stems from the many roles the Congress must play in the process. It has a duty to reach broad national policy decisions. It has an equal duty to deal with the detail of budget requests. It has oversight duties that require review of program effectiveness and efficiency. It must accommodate the constituent concerns of its members.

The Congress operates through a committee system, and the standing committees have all adopted procedures and methods that appear to them most appropriate for the performance of their duties. Of course, as the duties of committees differ, so do the procedures and methods adopted. For example, the Armed Services Committees attempt to obtain broad overviews of the programs and plans for DOD. While they also focus on detailed resource issues and they have increased the specificity of both their reviews and the legislation they develop, they maintain a primary interest in basic policy issues. Appropriations Committees conduct a much finer review, concentrating on specific inputs, and perform what is, in essence, a detailed review of the proposed budget. While they also focus on basic policy issues, they maintain a primary interest in the review of inputs. The Budget Committees take a much broader view to fulfill their function of guiding the Congress' aggregate budget review. The difference in perspective is, of course, a reflection of a difference of purpose. To support these perspectives, the Congress needs both input-oriented and output-oriented information.

The budget is a common base of information for all committees. The appropriations account structure for DOD centers on five basic categories: research, development, test and evaluation; procurement; construction; operation and maintenance; and military personnel.

Since the budget is structured along input-oriented appropriations accounts, many observers have focused on that structure as a major limiting factor on any attempt of the Congress to obtain a clear view of the outputs expected from the inputs requested. These observers point out that, although DOD does provide information on the expected outputs of requested input levels, the Congress still has difficulties assessing the outputs that might be expected at selected alternative input levels. Also, the Congress does not explicitly address strategies and risk.

Many agencies receive their appropriations in categories similar to those used in DOD. Some agencies, however, receive appropriations in much more program-oriented accounts. For example, the Food and Nutrition Service of the Department of Agriculture is funded through seven appropriations accounts covering the following: Food Program Administration; Food Stamp Program; Nutrition Assistance for Puerto Rico; Special Milk Program; Child Nutrition Programs; Special Supplemental Food Programs; and Food Donation Programs. Some full departments such as Justice and Treasury receive appropriations that reflect their organizational structure, which generally relates to their function.

THE CONGRESS NOT LIMITED TO APPROPRIATIONS STRUCTURE FOR POLICY REVIEW

The Congress has long recognized the limitation that would result from confining its review of the defense budget to appropriations categories. Even the Appropriations Committees, which have the most input-oriented focus, broaden their view for the hearings they conduct on each year's defense budget. The Subcommittee on Defense of the House Committee on Appropriations, for example, published 10 volumes of hearings on the fiscal year 1983 Defense Budget, which contained the transcripts of 42 specifically identified hearings. Of these, 8 were overview hearings, 5 concerned reprogramming requests, and 29 covered issues of special interest to the Committee and the Congress. Of these 29, only 3 were devoted exclusively to an appropriations account of the type identified.

Thus, to point out that the current develop/procure/construct/operate/pay structure has an input-oriented focus is not to say that the Congress has been kept from the output-oriented view by the focus. To the contrary, the Congress does review and consider output-oriented issues. But it does so by moving outside of the appropriations structure for its policy review rather than by using an appropriations structure keyed to outputs. The appropriations and authorization bills as well as the reports that accompany them are still structured along the lines of the appropriations accounts.

Attempts to develop useful ways to relate finite resources to more generalized capability indicators, such as readiness, have been frustrating defense analysts for years largely because of the problems in both defining and measuring such conditions as readiness. There has been the additional

problem of determining the interdependencies between resources and units of military capability, to assess which resources or combinations of inputs drive unit capabilities (training, spares, longevity of personnel, equipment, etc.) Simply changing the appropriations structure to one focusing on output rather than input would not eliminate those kinds of problems.

CONSIDERATION OF APPROPRIATIONS STRUCTURE UNDER McNAMARA

When Secretary of Defense McNamara instituted PPBS in DOD, considerable attention was given to the possibility of a change in the appropriations account structure both as a way of encouraging an output orientation in the Congress and as a way of avoiding the necessity within the department of shifting from the output orientation of the programming phase. His Defense Comptroller, Charles J. Hitch, was intimately involved in this process, having been a major contributor to the concept of PPBS during its development at The Rand Corporation in the 1950s and a major architect of the implementation of PPBS as DOD Comptroller.

By 1965, when he left that post, Mr. Hitch had changed his view. In his book, Decisionmaking for Defense, he explained the reasons behind his change of view:

> The existing budget structure serves some very useful purposes . . . this type of structure lends itself ideally to resources. Although military planning and the formulation of programs should logically be done in terms of missions and forces, the Department must be managed not only in those terms but also in terms of resources. . . . The present budget structure facilitates the estimation of resource costs as well as the execution of the resource program.
>
> This division of the budget by broad input or resource categories also provides needed flexibility for the adjustments in the program that are inevitably required in the course of the budget year. Program priorities and requirements always change in unanticipated ways even in the course of a single year as a result of international developments, technological breakthroughs (or disappointments), and all sorts of other events. It is important not to freeze programs in appropriations bills.
>
> Finally, the Congress, and particularly the Appropriations Committees, prefer the existing arrangement of the defense budget. They have been working with it for more than a decade and have established an historical basis for forming judgements on the validity of the budget request. . . . Although the President, under the Budget and Accounting Act of 1921, can propose his budget in any form he pleases, it is the Congress

> that determines how the funds will be appropriated and this, in turn, determines how the funds will be accounted for. I now feel that the advantages of the existing budget structure far outweigh the disadvantages, which are principally mechanical, namely, the need to translate program categories into budget categories and vice versa. This is the sort of disadvantage that modern high speed computers are well designed to overcome.

While Mr. Hitch and others have correctly summarized some of the benefits of the current appropriations account structure and pointed out some of the difficulties involved in any change, they have not focused on the consequences for the Congress or DOD that would spring from efforts to accommodate such a change.

THE POSSIBLE CONSEQUENCES OF A CHANGE IN THE APPROPRIATIONS STRUCTURE

The suggestion that the Congress improve its own decisionmaking process by revising its appropriations structure to be output-oriented is often made solely in the context of the perceived benefit to the Congress of focusing on and affecting broader issues. At times it is also claimed that DOD would benefit through reduced difficulty in translating decisions made in output terms, in the programming phase, into input terms, for the budget. This benefit would apply only if the translation did not have to be made at all. However, translation to an input-oriented structure eventually would be necessary to provide the controls required under Title 31 of the United States Code; the Federal Managers Financial Integrity Act; and to avoid violating the Anti-Deficiency Act.

A change affecting other PPBS phases might well be confined to PPBS itself, but a change in the basic budget structure funding all of the operations of DOD could affect (1) the entire DOD, (2) the way it conducts business, and (3) the roles and responsibilities of its component parts. This may be good or it may be bad, but it must be addressed in any attempt to assess the pros and cons of a suggested change that would align appropriations with missions. Suggested changes in the appropriations structure that we have seen in the literature are often advanced without discussing the effect on DOD activities.

To accommodate a mission-oriented appropriations structure, DOD would have to adopt accounting and control procedures that would effectively allocate specific resources along the designated mission lines. To the extent

that these mission lines reflected current organizational structures, little change would be required. However, the current organization of DOD is not along strictly combat mission lines.

Much would depend on the design of the new structure. The extremes are presented in the two following scenarios:

1. The Congress would insist on maintaining, within a mission- or output-oriented structure, the current level of control over projects, procurements, and other commodities at the expense of efficiency deriving from flexibility or economies of scale in DOD activities.
2. The Congress, while appropriating in broad mission categories, would accept a lessening of its control over items to foster efficiency in DOD's activities.

These alternatives appear to some to present a choice between two equally unacceptable alternatives for the Congress. However, the Congress may want to consider two possible positive factors:

--The Congress' level of control over major national policies might be increased.

--New accounting, evaluating, and reporting designs needed to meet the new structure might minimize any reduction in actual control over projects, procurements, etc.

Following is a discussion of each of the scenarios.

Scenario #1: The Congress would maintain control within an output-oriented structure

DOD appropriations for military personnel; operations and maintenance; procurement; research, development, test, and evaluation; and military construction currently flow down through management responsibility lines to the organizations that execute the programs. Military personnel appropriations are centrally managed by the organizations responsible for planning, programming, and budgeting and the distribution, assignment, and pay of those personnel. Ship, aircraft, and other military unit operations are likewise managed by the organizations that control those objectives or users. Central procurement activities control and spend procurement appropriations and so forth.

The military departments in their war fighting forces consist of operating units designed and structured to accept the product of these

organizations and integrate them into military units prepared to carry out military activities in terms of a variety of warfare or mission purposes.

This system reflects the management and control of appropriated funds at the point where the expenditure is actually authorized, that is, by the military personnel central management agency, the operating forces for operating units, procurement funds by the commodity contracting office, and so forth.

If funds were appropriated for the purpose of carrying out missions and included all of the funds that applied to the mission, namely the military personnel, operating, procurement, research, and construction funds applicable, the flow of funds could be quite different. Once funds were appropriated by mission, responsibility could be assigned for funds by mission appropriations to ensure proper and legal control and accountability. That responsibility could include management and control of the use of all resources needed to carry out the mission. The mission control system would carry with it the need for the mission manager to plan, program, and budget for those resources and to provide the requisite accounting mechanisms for the mission area covered, in addition to the management information systems to report on the mission's performance in programmatic terms.

Resources and activities that now provide non-mission-related or non-function-related support, such as recruiting, basic and technical training, medical care, housing, food service, consumable supplies, equipment and facilities repairs, maintenance, and the like, would still have to be managed. These functions should not be quickly dismissed as insignificant since they consume 30 percent or more of the service budgets. It is not clear how those support activities could be related to missions. The extent to which centralized organizations would be the most appropriate for carrying out or providing support services for research, contracting, and the like would need to be considered. It is not clear how transportation of people, supplies, and equipment between mission or support activities would be handled. Military personnel ratings, rank, promotions, transfer between missions, and their financial implications also present difficulties.

There still would be a need for the administrative organization that provides policy and general guidance, even though command and financial responsibility would rest with the mission appropriation managers. Further, in addition to current cross-service support issues, there would be questions on the management responsibility for the cross-mission implications of this arrangement for personnel, acquisitions, etc.

Scenario #2: The Congress would reduce its control while appropriating in broad mission categories

Another alternative is that the Congress would choose to reduce its control over projects, programs, and items by appropriating to DOD in a few broad mission-type categories and would allow DOD to make the allocation of budget authority across functions and missions. Many Defense activities make contributions to more than one mission, no matter how one defines mission. For example, some fighter aircraft can help protect strategic forces, conduct conventional ground attack operations, conduct air superiority operations, and protect sea lanes.

If, however, the Congress were to grant DOD the latitude necessary to allocate resources across functions and missions, it would suffer a corresponding reduction in its ability to direct spending to specific programs, bases, projects, activities, and the like.

We discussed the regional and constituent concerns of the Congress in chapter 2. Such a delegation of latitude would run counter to both the regional and constituent concern interests of the Congress and the perceived oversight responsibilities of that body.

A more likely scenario: A continued evolution

The history of defense resource allocation decisionmaking since the introduction of PPBS at DOD in the early 1960s has been one of evolutionary rather than revolutionary change. Accommodation has been made to the demands of the Congressional Budget and Impoundment Control Act of 1974, Zero-Based Budgeting initiatives of the late 1970s, and alternating cycles of centralization and decentralization of responsibilities. Each new demand has been met with incremental changes to the basic procedures then in force rather than with a fundamental change in the way DOD conducts business. The adoption of the congressional budget process, while of great importance in the way the Congress handles budgeting, did not require the abandonment of the authorize-then-appropriate concept. The addition of the Budget Committees, budget resolutions, reconciliation, and the increased analytical capabilities provided by the new Congressional Budget Office built on the base of the then existing budget process rather than restructuring the entire process.

Part of the quotation from Charles Hitch read "The Department must be managed not only in (mission and force) terms but also in terms of resources." It could also be said that the Congress must focus on both aspects of defense budgets. For this to happen in the most positive way, it is essential that

all participants be aware of the difficulty involved in trying to track backwards from missions to commodities as well as the benefits involved in the current system.

Building on the base of progress built over the past 2 decades, DOD can be expected to continue its improvements in measuring and displaying the relationship between requested inputs and expected outputs. Indeed, we present alternatives that address this point in our sections on Programmatic Analysis of Operating Accounts and on Budget Presentation and Justification. The Congress, for its part, can continue improvements in its review and oversight activities. We present alternatives touching on these points in four of the nine sections in chapter 3.

The important aspect in any evolutionary change such as we envision is for all parties to keep in mind the essential features of the system on which they build and conduct thorough assessments of all of the effects of proposed changes. We hope this review of the relationship of the appropriations structure to resource allocation decisionmaking will make a contribution to this process.

APPENDIX I: SUMMARY OF ALTERNATIVES AND THE ORGANIZATIONS INVOLVED IN CHANGES

The following summarizes each of the areas of potential improvement of PPBS which are discussed in chapter 3. The summary is keyed to the nine problem areas agreed upon by the Working Group and lists the alternatives and the organizations directly involved in changes.

		Congress	EOP	OSD	DOD Components
1. Planning, its Linkage with Programming, and Cross-Service Analysis					
1-1	o Presidential defense posture statement is made mandatory in inaugural year	X	X		
or					
1-2	o Presidential defense posture statement is encouraged in inaugural year	X	X		
or					
1-3	o New administration's defense posture statement is made mandatory but is delivered by the SECDEF	X	X		
1-4	o Study team review of effectiveness of cross-service review and analysis is initiated			X	
1-5	o OSD develops and promulgates uniform definitions relative to planning and programming			X	
and					
1-6	o A broad educational program is initiated relative to PPBS			X	X
and					
1-7	o A targeted educational program is initiated for PPBS participants			X	X
2. Time Horizon and Out-Year Uncertainties					
2-1	o OSD initiates a special study of EPA practices, needs, and requirements			X	
and					
2-2	o OSD requires services to submit simultaneously their EPA and POM			X	X
and					
2-3	o OSD requires excursions at alternative top-line change rates in EPA submissions			X	X
2-4	o OSD includes an annual assessment and summary of EPA period outlook in first Program Review Book (Policy and Risk Assessment)			X	X

		Congress	EOP	OSD	DOD Components
3. Structures of Information in PPBS					
3-1	o SECDEF initiates more rigorous definition and application of "four pillars" concept			X	X
or					
3-2	o "Four pillars" concept is abandoned in favor of new system with a category for common administrative and support costs			X	X
3-3	o OSD initiates DOD-wide review of FYDP structure			X	X
3-4	o OSD allows re-opening of reclama deadline for linked PBDs			X	X
or					
3-5	o OSD establishes a single suspense date for omnibus reclama to PBDs			X	X
4. Budget Presentation and Justification					
4-1	o DOD completes its assessment of FY 84 justifications and uses this as a basis for FY 85 improvements			X	
and					
4-2	o DOD conducts equivalent assessment of FY 85 justifications			X	
or					
4-3	o DOD institutes annual assessment of justifications			X	
4-4	o OSD establishes forum to consider mission orientation, access to out-year data, and periodic updating for justifications	X		X	
5. Managerial Flexibility and Legislative Control					
5-1	o A DOD-wide/congressional committee review of reprogramming request handling procedures is initiated	X		X	X

		Congress	EOP	OSD	DOD Components
5-2	o DOD requests permission to incorporate pay raises in DOD budget	X	X	X	X
5-3	o Congress minimizes undistributed adjustments and avoids the mandating of large absorption rates on pay raise funding	X			
5-4	o DOD initiates cooperative effort with congressional committees to aggregate major procurement line items along generic lines	X		X	
6. Timing and Work Intensity					
6-1	o OSD requires services to develop POMs of budget level detail and quality and conducts simultaneous program and budget review			X	X
or					
6-2	o OSD requires the services to develop the budget first, then address major program issues using latest fiscal and political information			X	X
6-3	o OSD adopts 2-year DG cycle with policy review and top-level briefings in alternate years		X	X	X
or					
6-4	o OSD adopts 2-year DG cycle and 2-year POM cycle		X	X	X
or					
6-5	o OSD proposes biennial funding in conjunction with 2-year DG cycle and 2-year POM cycle	X	X	X	X
6-6	o OSD consolidates the PBDs into a single omnibus decision document			X	X

		Congress	EOP	OSD	DOD Components
7. Programmatic Analysis of Operating Accounts					
7-1	o OSD initiates and coordinates effort to relate resource inputs to aggregate readiness/ sustainability goals			X	X
and					
7-2	o OSD develops summary justification information regarding effect of dollars on readiness/ sustainability			X	X
8. Compatibility Among Management Information Stystems					
8-1	Mechanisms are established for sharing information on development plans among offices with PPBS responsibilities			X	X
and					
8-2	o Service organizations charged with PRA functions are assigned special responsibility for co-ordinating PPB-supportive systems			X	X
or					
8-3	o Offices focusing on MIS are assigned special responsibility for coordinating PPB-supportive systems			X	X
or					
8-4	o PPBS information system staff are established in each service and OSD as part of the office of a high level official			X	X
8-5	o A major DOD-wide review is conducted of PPBS information structures and systems, and a PPBS Information Plan is developed			X	X

			Congress	EOP	OSD	DOD Components
9.		Management Review, Evaluation and Feedback				
9-1	o	OSD and services increase initiatives to monitor and review performance and budget execution in terms of outputs and goals			X	X
9-2	o	OSD and services require selected PPBS committees and working groups to work with audit offices to develop more comprehensive audits, reviews, and evaluations pertinent to PPBS			X	X
9-3		OSD and services initiate reviews to improve currency, accuracy, and completeness of major recurring records, reports, and information systems pertinent to PPBS			X	X

APPENDIX II: PPBS PROCESS FLOWCHARTS

To understand more fully PPBS and potential areas for improvement, the Working Group charted the major documents, meetings, and other activities involved in each phase of PPBS. The charts were prepared in consultation with the DOD members of the Working Group and were reviewed by representatives of the DOD offices whose activities are depicted.

For the purposes of this study, the execution phase is considered part of the PPBS process. (The Army has formally included execution in its process, now calling it PPBES.) The charts are based on a 5-year cycle, denoting the preparation of the FY 5-9 POM and the FY 5 budget. (FY 5 is the execution year.) Most of the charts use a variable time scale, to allow a clearer presentation of the process during times of intensive activity.

The charts are organized chronologically within each service, with OSD and DOD-wide charts presented first. The charts have overlapping time frames to show the linkages between phases. Each chart concentrates on a particular phase and service, and generally omits the activities involving other phases or other DOD components that occur within the chart's time frame. With each chart is a brief narrative describing the phase.

It should be noted that the Navy and the Marine Corps PPBS processes are separately described (sections 4 and 6). Two distinct Program Objectives Memoranda (POMs)are prepared and combined at the last stage of the process into the Department of the Navy (DON) POM.

A list of abbreviations and acronyms used on the charts is provided in appendix III (pp. 177-181).

DOD PPBS FLOWCHARTS:

KEY TO SYMBOLS

DOCUMENT OR INFORMATION

ACTIVITY

RECIPIENT OF DOCUMENT

PREVIOUS YEAR'S DOCUMENT OR INFORMATION

INDIVIDUAL OR OFFICE
(PRESENTATION CHART ONLY)

INFORMAL CONSULTATION OR INPUT

DIRECTION OF INFORMATION FLOW;
INDICATES INPUT, SHOWS INTERACTIONS

SECTION 1: OSD PPBS

PLANNING PHASE[10]

The Joint Chiefs of Staff (JCS) play a key role in developing background and guidance documents for the planning phase of PPBS. Through the Joint Strategic Planning System (JSPS), the JCS provide OSD with intelligence estimates and priorities; long-range trends, developments, and alternatives; threat and capability assessments; and other views, recommendations, and appraisals applicable to strategic planning. The Joint Intelligence Estimate for Planning (JIEP) is the first annual JCS document that directly influences the PPBS cycle. (See figure 8, p. 35.) Using input from the Defense Intelligence Agency (DIA), the National Intelligence Community (NIC), and the Commanders-in-Chief (CINCs), it is completed in December of each year.

The JIEP provides input to the Joint Strategic Planning Document (JSPD) and its Supporting Analyses I and II (JSPDSA I & II). The JSPDSA I, issued in March, provides military strategy and force planning guidance and JCS views on the international environment. The JSPDSA II, issued in August, contains the JCS-approved Planning Force and support levels for strategic and general purpose forces, and projected and recommended allied and friendly forces. The Planning Force creates a backdrop against which the service POM will be assessed in determining the risk to U.S. security and interests.

The Joint Long-Range Strategic Appraisal (JLRSA, not shown on flow chart) is published every 4 years and provides input to the JSPD. The JLRSA provides long-range intelligence estimates for 20 years into the future. Its purpose is to provide a framework for broad force structure implications and assessments. The JLRSA serves as the basis for transition from mid- to long-range strategic planning.

The JSPD summarizes its supporting analyses, providing a comprehensive review of the threat to U.S. interests and JCS input on military strategy. It is issued in September to the SECDEF, where it is used in drafting the DG. The SECDEF also forwards the JSPD to the Executive Office of the President (EOP).

---

[10]The reader is reminded that the "planning phase" herein described encompasses more than is traditionally included in PPBS. See figure 1, p. 5.

OSD PPBS: PLANNING PHASE

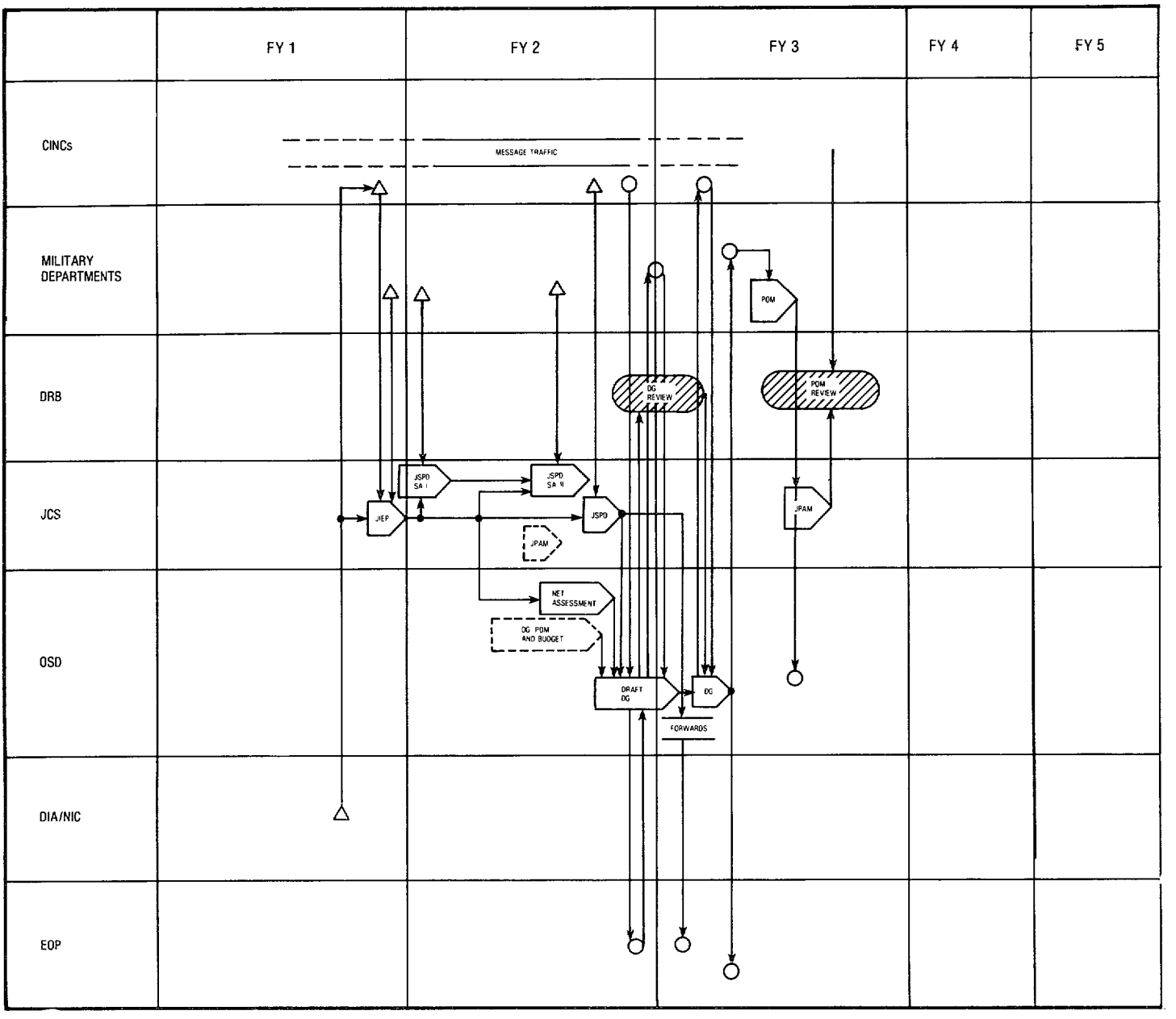

In OSD, the Under Secretary of Defense for Policy (USD(P)) takes the lead in drafting the DG. The previous year's DG, Program Decision Memoranda (PDMs), and budget are used as inputs. The Net Assessment, another input, is a compilation of threat and capability assessments from the JCS and the services. The DG Steering Group, chaired by the Deputy Under Secretary of Defense for Policy (DUSD(P)), helps to develop and coordinate the DG. The development of the DG requires extensive dialog between OSD, JCS, and the services.

As drafts of chapters of the DG are produced, they are circulated to the military departments and to the EOP for review and comment. At that time, the services will begin to use the draft DG as guidance in developing their programs.

The draft DG is reviewed by the CINCs and by the Defense Resources Board (DRB) until the final DG is issued in January of FY 3. The DG is generally considered the link between planning and programming, as it provides the offical planning guidance to the military departments for developing their POMs.

Three of the initial major programming documents and activities, the POM, POM review, and JPAM (Joint Program Assessment Memorandum), are presented on the planning chart to show how the phases fit together. See the programming charts and narrative for a full description of POM development and review.

POM REVIEW PROCESS

The military departments' POMs for FY 5-9 are sent to the Secretary of Defense (tape and hard copy) around the second week of May in FY 3. The hard copy portion (documentation) also goes to the JCS who have 30 days to assess the extent to which they comply with the DG. This evaluation is reported to the SECDEF in the JPAM.

Meanwhile, the OSD staff prepare a set of thumbnail issue sketches, i.e., alternatives to some of the programs included in the service POMs. Other thumbnail sketches are prepared by OMB. All the sketches are examined by the Program Review Group (PRG), which agrees upon a set of candidate issues to be addressed by the DRB. The DRB makes the final selection from this list, whereupon OSD staff begin to prepare individual papers summarizing each selected issue. The services and OMB help to formulate the issue papers, and the JCS also provide inputs. Each paper consists of a discussion section, followed by several alternatives, the first-listed alternative always being

the POM position. The issues are combined into eight issue books (also termed program review books): policy and risk assessment; nuclear forces; conventional forces; modernization and investment; readiness and other logistics; manpower; intelligence; and management initiatives. These books form the basis for DRB consideration. Prior to the DRB meetings, however, the issue books are circulated (to other OSD staff, to JCS staff, and to the services) for review and written comment. The comments are included with the issue book "package" considered by the DRB.

The members of the DRB are the Deputy Secretary of Defense (DEPSECDEF), chairman; Under Secretary of Defense for Policy; Under Secretary of Defense for Research and Engineering; Assistant Secretary of Defense for Legislative Affairs; Assistant Secretary of Defense, Comptroller; Assistant Secretary of Defense for Manpower, Reserve Affairs, and Logistics; Assistant Secretary of Defense for Public Affairs; Assistant Secretary of Defense for Health Affairs; Chairman of the JCS; the Secretaries of the Navy, Army, and Air Force; and an Associate Director of OMB.

The DRB has multiple meetings over a 2 to 3 week period to resolve the issues. The CINCs present their views at a special initial meeting. The service chiefs attend all meetings as observers. The Board is chaired by the DEPSECDEF but the SECDEF may also attend. Each book is the subject of at least one 2-3 hour meeting, after which the DEPSECDEF reaches a tentative decision. After all the books have been individually reviewed, a wrap-up meeting is held to evaluate the total effect of the tentative decisions on the program. Open issues are resolved, and final decisions are reached and recorded, about the beginning of August, in a PDM for each military department.

DOD PPBS: POM REVIEW PROCESS

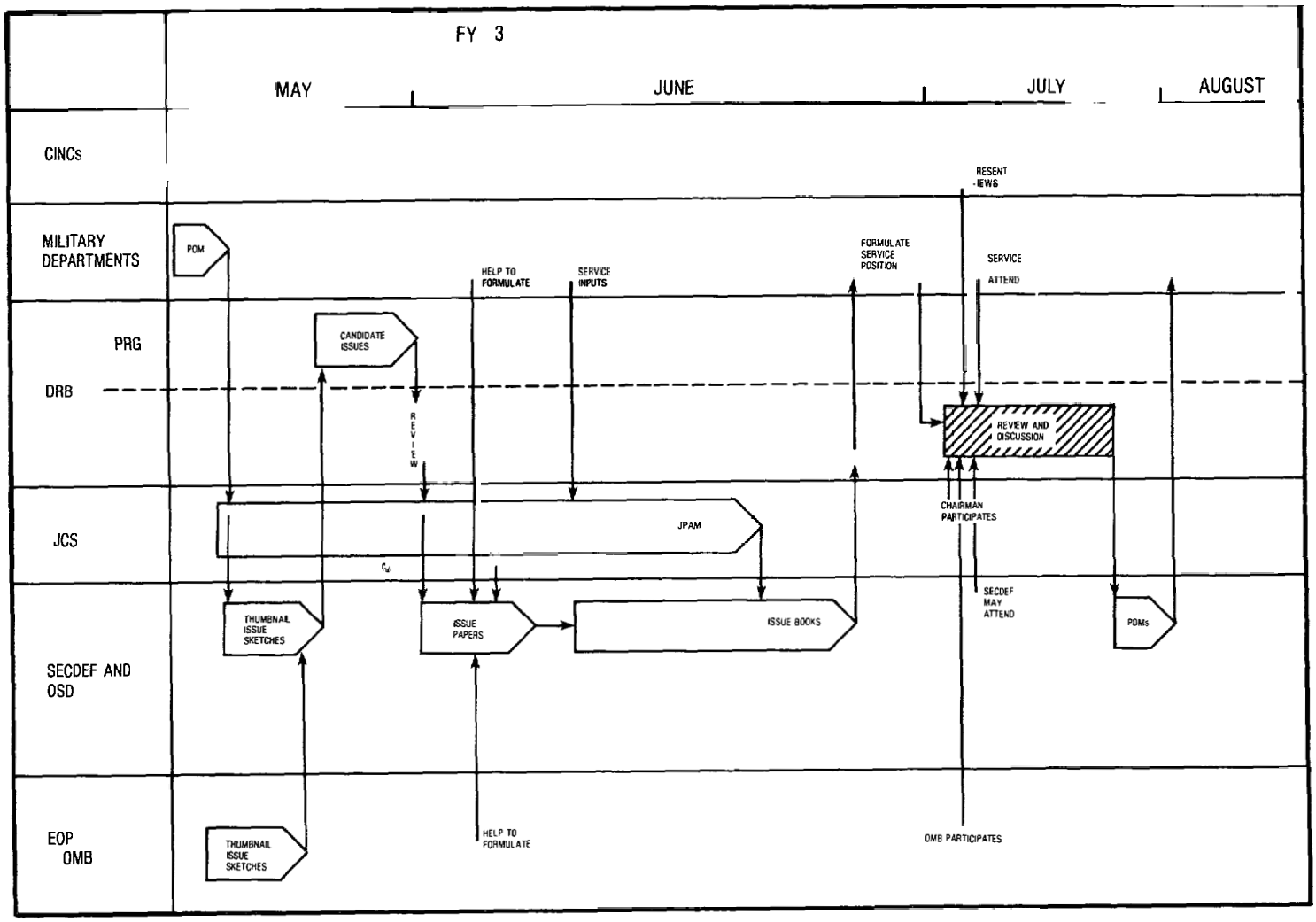

BUDGET REVIEW PHASE

Each of the military departments and the defense agencies forwards its budget submission to the Office of the Assistant Secretary of Defense (Comptroller) (ASD(C)), and specifically to the Deputy Assistant Secretary of Defense (Program/Budget) (DASD(P/B)). This submission is traditionally due by September 15th. Upon receipt of the submission, the Comptroller's Program/Budget shop begins the joint OSD/OMB hearings to review the submission. These hearings, jointly conducted by DASD(P/B) and OMB representatives, are attended by appropriate members of the JCS and OSD staffs (Policy; Research & Engineering; Manpower, Reserve Affairs & Logistics; etc.). The various military departments make presentations concerning their submissions and respond to questions.

The hearings are conducted for the DASD(P/B) by the budget analyst responsible for that portion of the budget to obtain additional information necessary for drafting the Program Budget Decision (PBD). While the budget analyst has the lead in developing the PBD, other OSD staff provide appropriate recommendations and support. When each individual PDM is written, it is coordinated with OMB and the Under Secretaries and Assistant Secretaries of Defense. Each PBD consists of a discussion of the area, with issues and a series of alternatives. PBDs are forwarded to the DEPSECDEF with a covering memorandum that identifies any unresolved coordination issues. The DEPSECDEF then chooses one of the alternatives or directs a new one, and the signed PBD goes to the military department.

If the department appeals a PBD, the reclama is processed through the same channels as was the PBD. The DEPSECDEF makes the reclama decision. An opportunity is provided as near the end of the review cycle as possible for the military department secretaries and service chiefs to address with the SECDEF those major budget issues they believe to have negative impacts sufficiently serious to merit his personal review.

If, at the end of the DOD process, OMB feels that unresolved differences remain between itself and DOD, these issues are raised when the Secretary meets with the President. The Budget Justification Books are compiled following final decisions on the budget. All military departments submit their books to OSD for review before sending them to the Congress.

OSD PPBS: BUDGET REVIEW PHASE

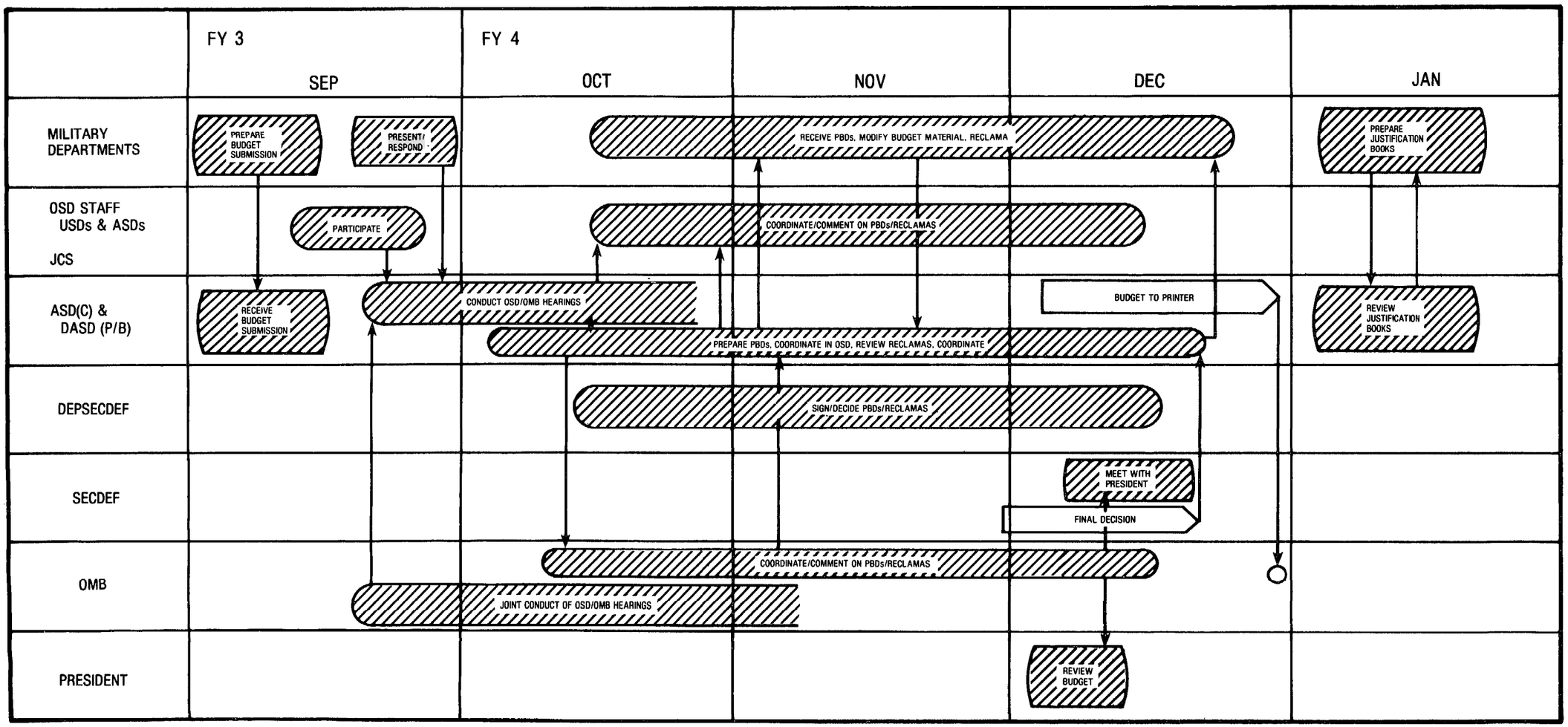

SECTION 2: DOD BUDGET PRESENTATION AND RELATED CONGRESSIONAL ACTIVITES

The chart maps the process from the transmittal by the SECDEF of DOD's budget for FY 5 to the President in January (FY 4) to the President's signing of the appropriations bill. The chart presents an idealized process in which delays do not occur. The deadlines depicted here are seldom achieved in reality, and the questions of presidential veto or failure to achieve congressional consensus are not addressed. While this chart shows the activities associated with the annual budget for DOD, supplemental requests follow a similar path: the difference is one of timing only. Congressional action on such supplementals necessarily disrupts the regular annual cycle shown here.

Three major committees in each house act upon the defense budget: the Budget Committees, the authorization (Armed Services) committees, and the Appropriations Committees. The Budget Committees deal with aggregate budget function levels. The Budget Committees are not shown on the chart since they focus on the budget as a whole rather than specifically on the defense segment. The Armed Services Committees deal with gross dollars for mission areas and are responsible for legislation that authorizes programs and permits appropriations to be made. (The Intelligence Committees perform this same function in selected sensitive areas.) The Appropriations Committees are responsible for appropriating funds and allocating specific dollars. The various subcommittees involved in the process are listed on the time chart, but are not treated individually. The chart does not make a distinction between activities occurring in the Senate and those occurring in the House.

The authorization process begins the congressional action on the DOD budget and normally extends from January to about May of FY 4. Detailed review begins early in February, based upon the President's budget and justification materials provided by the service budget offices. Overview statements and testimony are routinely delivered by the SECDEF, Chairman of the JCS, the Office of Assistant Secretary of Defense (Comptroller), the Under Secretary of Defense for Research and Engineering, various assistant secretaries of defense, and other OSD functional staff. Requests for additional documentation for the record are channeled through legislative liaison offices. However, specific requests for clarification go directly to the appropriate assistant secretary or functional staff member.

Similarly, at the service level, secretaries, chiefs of staff, and budget officers invariably provide overview statements and testimony, with additional testimony and/or back-up materials from service program witnesses or other functional staff as required. Again, there is a different information flow depending on whether the response is for the record or for clarification. In addition to these charted contacts, numerous documents are passed on to committee members, including reports and actions and special acquisition back-up books. These and other documents also flow between the budget offices and the committee staffs on special issues.

When committee and subcommittee hearings are complete, the committees mark-up legislation and issue an accompanying report. The process occurs in parallel in the House and Senate, with differences reconciled by a conference committee. When appropriate, OSD may send the committee chairman a letter of appeal, noting exceptions to action taken and outcomes preferred by DOD. The amended authorization bill is then passed and forwarded to the President for signature or veto.

The Appropriations Committees perform very similar activities, with the additional input of the authorization bill provisions as it moves through the committee process. The final, agreed-upon appropriations bill is intended to be passed and signed by the President by September 30 (FY 4) so that it can take effect on October 1, the beginning of the new fiscal year.

In the "Special Analyses" volume of the President's budget is the Current Services Budget, as mandated by the Congressional Budget and Impoundment Control Act of 1974. This budget, which is based on current program levels, projects estimated budget authority and outlays for the fiscal year. The Budget Committees also receive the Joint Economic Committee's analysis of these current service estimates. After holding hearings and receiving views and estimates from all committees and a fiscal policy report by the Congressional Budget Office, the Budget Committees draft a First Concurrent Resolution Recommendation (April, FY 4), which the Congress subsequently adopts in May. This contains Government-wide budget targets. (The 1974 Act precludes from consideration any new budget authority unless the bills have been reported to the Congress by this date.) The Budget Committees subsequently prepare and report a Second Concurrent Resolution on the budget. This contains budget ceilings and is adopted by the Congress in mid-September.

DOD BUDGET PRESENTATION AND RELATED CONGRESSIONAL ACTIVITIES

(Budget Committees Not Shown)

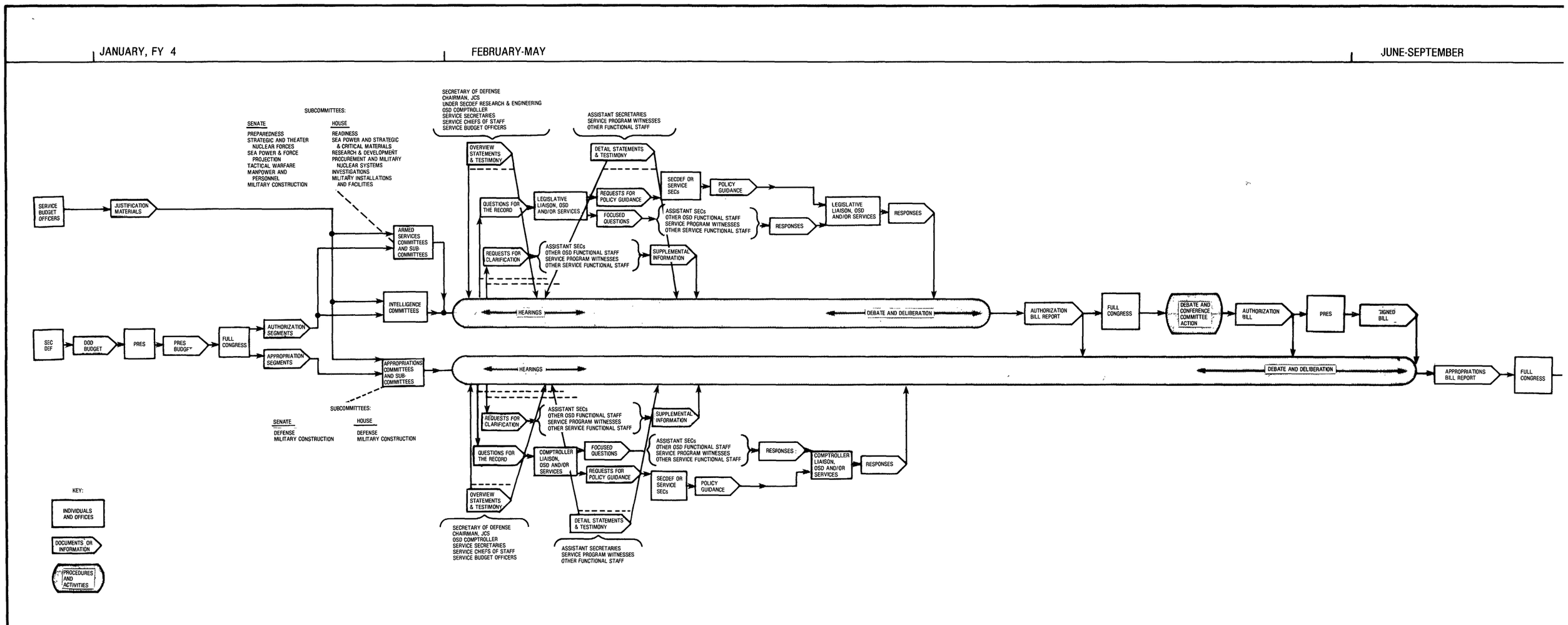

DOD BUDGET PRESENTATION AND RELATED CONGRESSIONAL ACTIVITIES

(Budget Committees Not Shown)

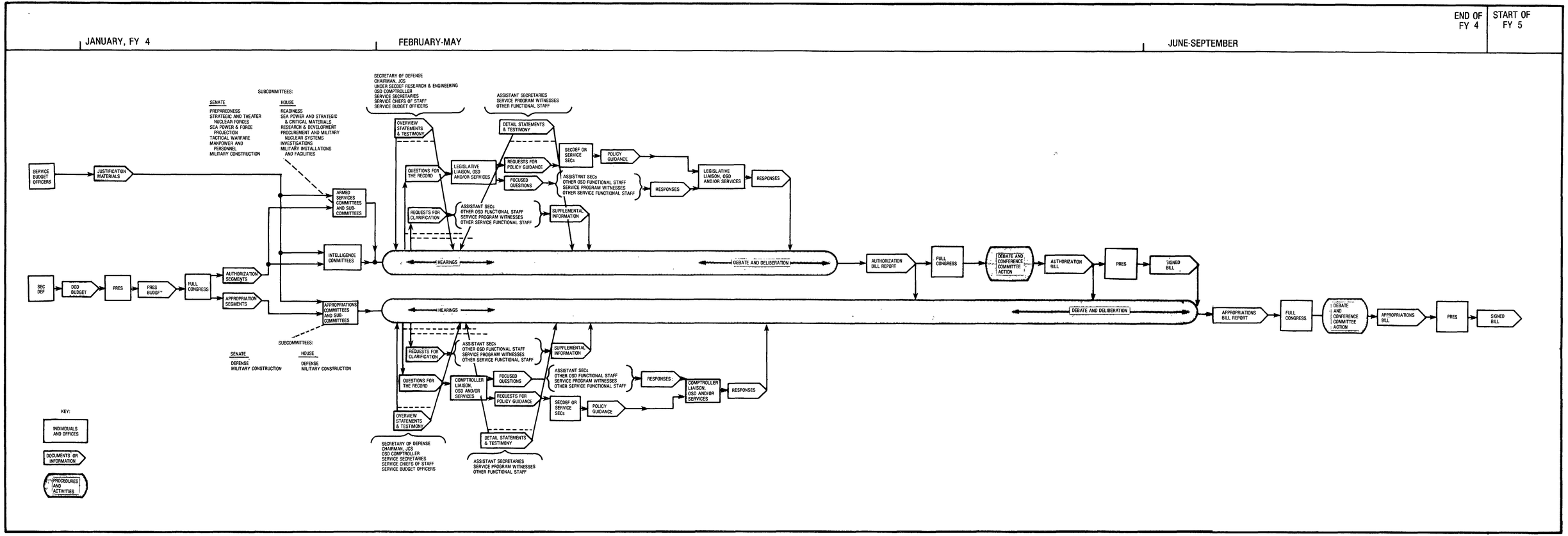

SECTION 3: ARMY PPBES

PLANNING PHASE

The initial step in the Army planning process is the generation of the Army Strategic Appraisal (ASA) by the Strategic Studies Institute of the Army War College. This document addresses force planning issues for 3-10 years into the future, which is defined as the mid-range. An unconstrained and independent document, the ASA is not recognized as an official Army document and is not signed by the Chief of Staff.

Strategic planning studies are also performed by the Strategic Plans and Policy Division of the Long Range Planning Office of the Deputy Chief of Staff for Operations and Plans. Some portions of the output of this effort are forwarded to the JCS for integration into the JSPDSA I and to OSD for use in the preparation of the draft DG.

The ASA is one input to developing the Planning Force, which, in turn, is one of the two critical steps in the development of the Army Plan. The Army Plan, also called the Army Guidance Volume I, is the primary long-range planning document for the Army. It describes how the Army plans to attain its missions and how it will build the Objective Force. Force planning is influenced by the identification of shortfalls and limitations (outputs of the Operational Planning and major commands (MACOMs)), as well as the previous year's DG, Joint Strategic Planning Document, and Army Plan.

Force planning outputs appear to be unconstrained. Therefore, the next step in the process, the Macro Analysis, evaluates force capabilities based upon expected dollars and manpower. This analysis identifies alternative combinations of force size, composition, and quality.

During the Macro Analysis, OSD issues the PDM, which is used as an input to focus the Macro Analysis.

The Chief of Staff and the Secretary of the Army review the results of the Macro Analysis and select a preferred alternative, which forms the basis of the Army Plan.

The Army Plan describes what the Army wants to do to attain its missions and how it will build the Objective Force. The draft DG is also used as an input to the Army Plan, thus the ongoing link with OSD is continued.

The Army Guidance (AG) and the DG form the basis for the generation of the Army POM, which is issued in May of FY 3.

Another way of describing the Army planning process is to view it in terms of three components. The first component is concerned with identifying requirements. This is carried out from mid-February to mid-August, and results in the Army Planning Force (which is unconstrained). The second step in the process (performed during July and August) develops the constrained Objective Force. The third and final step involves the planning decision activity and results in the approval and issuance of the Army Plan. During this step of the process, cross-service issues are addressed and the Army formally staffs these issues.

The Army recognizes that it must deal with five distinct and different force levels during the PPBS process. The first two are the CINCs' Minimum Risk Force and the JCS' Planning Force, while the remaining three are the Army's Current Force (which is in being), the Program Objective Force (which is the goal established as the target to be attained by the end of the POM period), and the EPA Force (which is the goal identified as the force that is desired at the end of the EPA period--15 years beyond the current budget year).

PROGRAMMING PHASE

The key link between Army planning and programming is the AG, which consists of four separate documents produced at various points of the PPBS cycle. AG I, the Army Plan, issued by the Deputy Chief of Staff for Operations and Plans (DCSOPS) in December (FY 3 for the FY 5-9 program), directly interprets the DG (based on draft versions) in terms of Army responsibilities and missions. Before that, however, AG II is issued in August (FY 2) and AG III is issued in October (FY 3). AG II is the Program Development volume and can be regarded as initiating the programming phase. AG III, the Supplemental Plan and Program Guidance, provides supplemental programming instructions. AG IV, issued in March (FY 3) provides specific instructions for submission of the POM.

The Directorate of Program Analysis and Evaluation (PAED) is the chief coordinating office for the programming phase. It issues all volumes of the AG except AG I, which is issued by DCSOPS. Other events also help link planning (the responsibility of DCSOPS) and programming. Total Army Analysis (TAA) is an ongoing computer-assisted force development process enabling the Army Staff to assess the affordability of force structure requirements relative to allocated resources. The Army Commanders' Conference is held in October.

ARMY PPBES: PLANNING PHASE

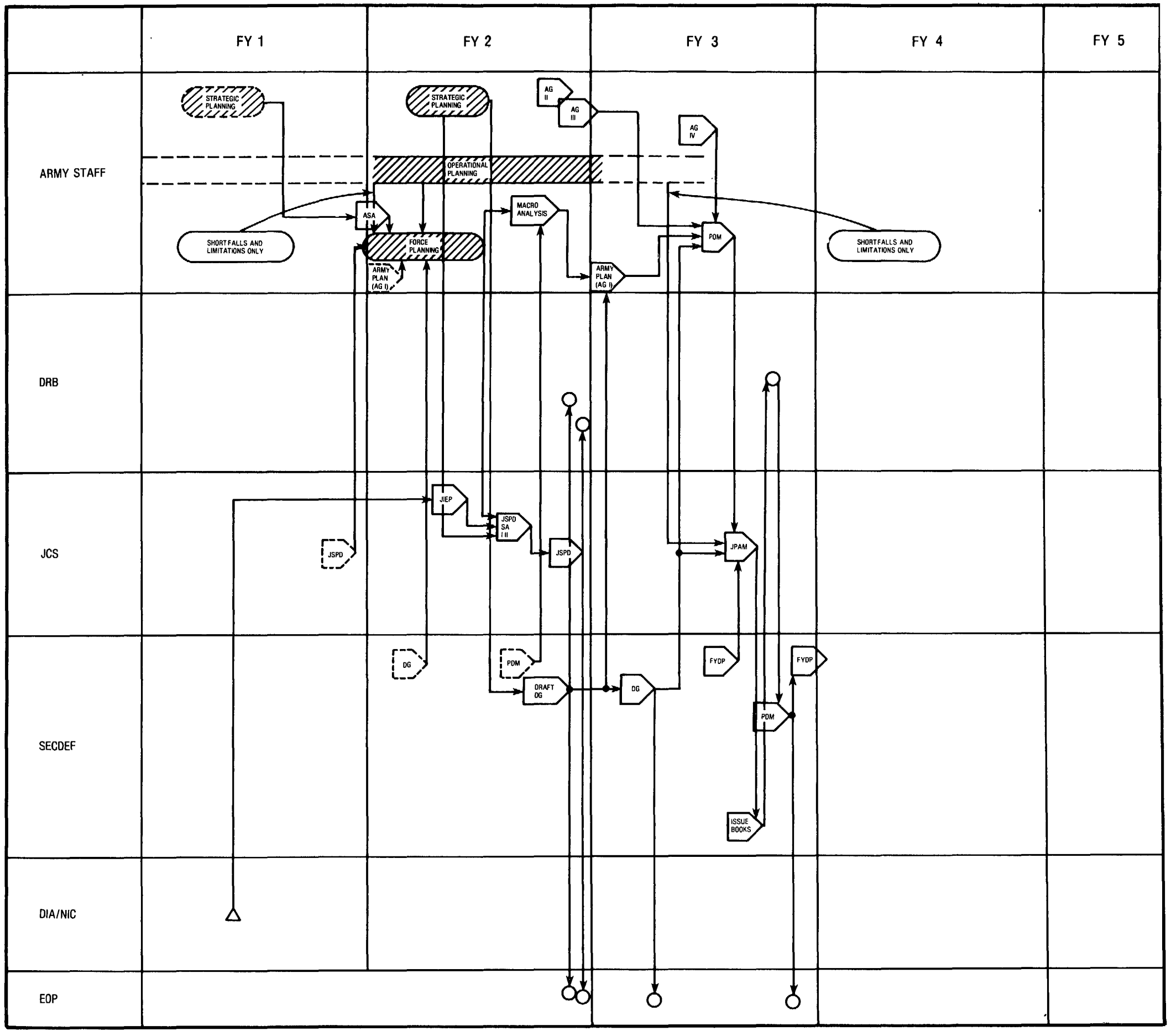

This is a forum where four-star Commanders and Army Staff principals meet with the Chief and the Vice Chief of Staff to review Army-wide matters and deal with issues previously raised by the Commanders, following their evaluation of the prior-year POM. In November, inputs are also available from the U.S. Army Operational Readiness Analysis (OMNIBUS), which defines force capability existing at the end of the prior fiscal year and develops prioritized recommendations to improve force performance.

The Director of the Army Budget (DAB) in the Comptroller's office prepares a Program and Budget Guidance (PBG) document that transmits to the commands and operating agencies instructions and staff data regarding available dollar and manpower resources. It is the single authoritative source of command resource guidance and is issued three times annually in two volumes. Volume I contains general instructions and expresses the views of Headquarters, Department of the Army, on various programs common to all commands and agencies. Volume II contains resource data applicable to a particular command and is published individually for each command and agency.

The October/November PBG reflects appropriations levels for the new current year and furnishes guidance for preparing the next year's Program Analysis and Resource Review documents (PAARs), to be submitted by the major commands to PAED. These documents identify and explain new initiatives and changes to existing programs and include a prioritization that merges new and existing requirements. They are accompanied by repricing proposals termed Modernization Resource Information Submissions (MRIS).

Most units in the force structure and most existing activities maintain stability from year to year without serious challenge. Each is described by a document called the Program Development Increment Package (PDIP). Other PDIPs divide all remaining forces and activities into particular capabilities with their resource cost.

During January and February, program assessment, staff functional reviews, and command reprogramming identify additional program issues. These are covered in new PDIPs. Depending on their nature or source, they fall into one of four categories:

- Compliance PDIPs. These are initiated by staff functional proponents and address requirements mandated by the DG to overcome identified inadequacies in the overall defense program.
- Department of the Army-directed PDIPs. These are initiated by staff functional proponents and communicated to the commands in AG Volume I.

They may apply to more than one command and require command assistance in costing. They are included in the command PARR document.

- Army staff-initiated PDIPs. These are submitted by the initiating agency directly to the functional proponent for inclusion in the functional program.
- Command PDIPs. These are initiated by commands for new programs or new funding levels for old programs and are submitted with the PARRs.

Each PDIP is assigned to a functional point of contact and a contact point in PAED. About the end of February, PAED distributes all PDIPs to functional area panels for ranking, based on the eight Army functions (structure, man, equip, train, mobilize, deploy, sustain, and provide facilities). They produce eight lists of PDIPs that are merged by DCSOPS into a single list (the Adjusted Program) for review by the Ranking Committee (a subcommittee of the Program and Budget Committee (PBC)). A final prioritized list is negotiated between the Ranking Committee and DCSOPS, who sends the list to PAED.

During late March and early April, PAED prepares a draft POM, and program directors discuss and defend their proposed programs in that draft before the PBC. This results in a refined draft POM, which is presented to the Select Committee (SELCOM) for further review and modification. The PBC and SELCOM explore issues, risks, and trade-offs, and evaluate the overall program in terms of program balance and ability, within given resources, to carry out the Army missions. The SELCOM then presents its recommendations to the Chief of Staff and the Secretary of the Army for final review and approval. Once approved, the staff and PAED develop the final Army POM, which goes to the SECDEF in mid-May.

The OSD review process (May to August) shown on the chart was previously described in section 2 of this appendix.

ARMY PPBES: PROGRAMMING PHASE

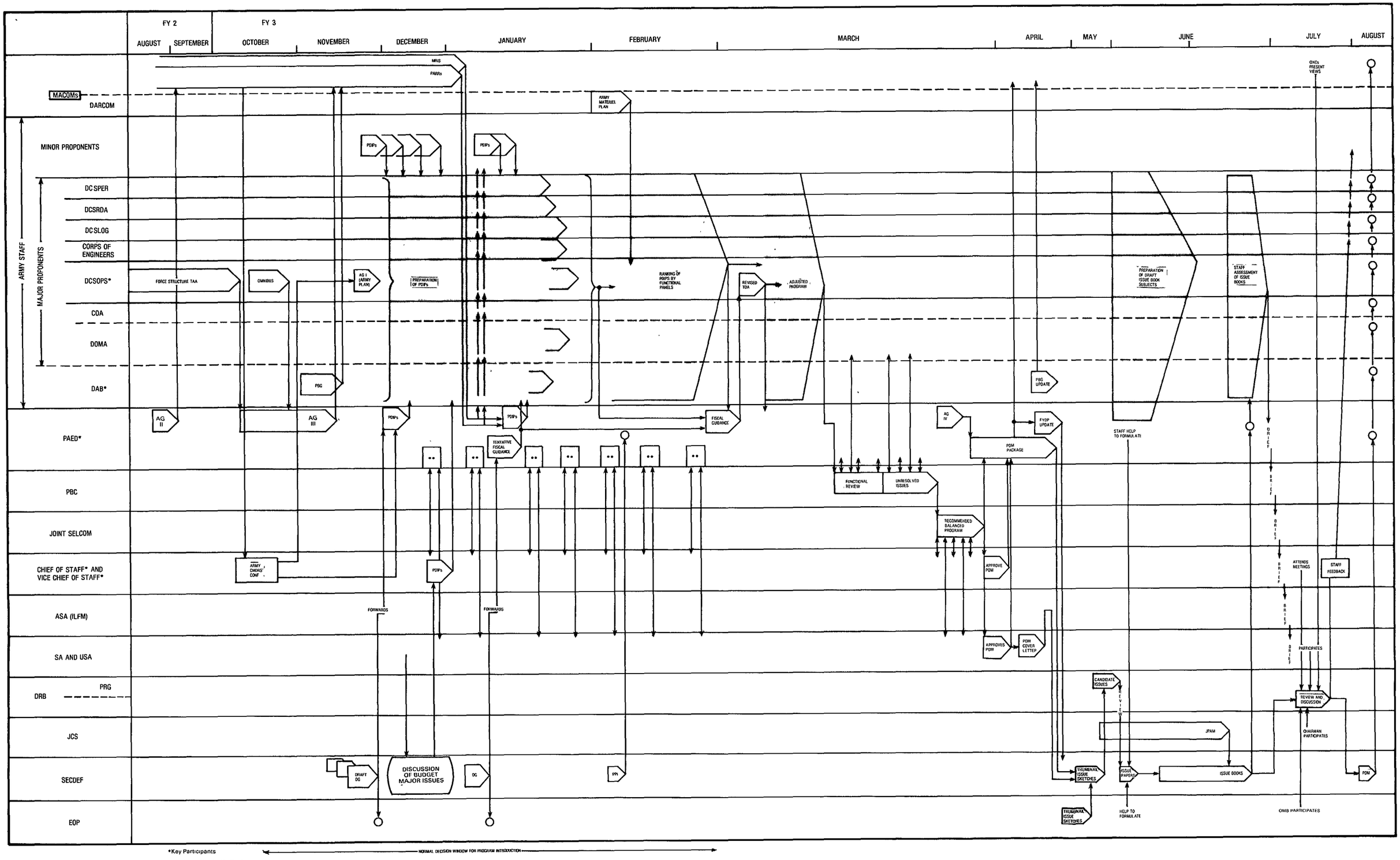

*Key Participants

•• Weekly or Bi-Weekly Briefings

BUDGET FORMULATION PHASE

In FY 3, the Director of Army Budget issues the PBG, reflecting the thrust of the President's budget. Based on the estimates for the next year, the MACOMs issue base-level guidance for the field-level operating budget submissions due in May. The MACOMs then refine this input by considering the POM submission and the May PBG in their development of the Command Operating Budget (COB). This is submitted in July to the Comptroller of the Army (COA), with the Operations and Maintenance (O&M) portion specifically going to the Director of Operations and Maintenance, Army (DOMA). The 12 programs in the O&M appropriation are assigned to the major staff elements (program directors), who are their "proponents," with the Comptroller acting as the unifying party. The COB data on remaining Army appropriations are forwarded to the proponent director. Under the Comptroller's supervision, the proponents review the COB and assemble the Army budget in light of the Program Decision Memorandum.

While the DOMA is responsible for moving the O&M material through the COB process, the DAB, also part of the Comptroller office, has overall review and analysis responsibility for it and the other appropriations. The DAB supplements the standard guidance based on the PDM, and the proponents may meet as the Ranking Committee, depending on the amount of change in the PDM. If the Ranking Committee does not meet, any minor rankings needed are done by an ad hoc group consisting of the Deputy Chief of Staff, Operations; Director, Program and Evaluation; and the DAB.

DAB staff brief the DAB on their first cut of the budget, and the DAB may contact various proponents on areas that need further development. After the Army budget has been assembled and priced, it is presented to the Program Budget Committee, a two-star committee made up of members of the Army Staff (ARSTAF) and Secretariat and co-chaired by the DAB and the PAED. They review the Army budget by having each proponent make a presentation to the committee. The PBC then recommends that the budget, as modified, be approved. The DAB presents this budget to the Joint SELCOM, a three-star committee made up of ARSTAF and Secretariat representatives. It is co-chaired by the Under Secretary and the Vice Chief of Staff. In this way, military and civilian levels are briefed simultaneously. After the SELCOM clears the budget, it is forwarded for approval to the Chief of Staff and the Secretary of the Army. It is then transmitted to the Assistant Secretary of Defense (Comptroller).

The Army budget reaches OSD as a transmittal letter, hard copy tables, and a "delta" tape containing the net changes to the Army Five Year Defense

Plan (FYDP), which is used to update the DOD FYDP. The OASD(C) then circulates the Army budget among the appropriate OSD functional staff. The staff person responsible for each Program Budget Decision (PBD) holds hearings, which are co-chaired by OMB, and appropriate service functional staff testify. The PBDs are then circulated in a multiple option format, and OSD staff members--plus OMB--indicate preferences. At the same time, an advance copy of the PBD is sent back to the Army, showing options but not the "votes." This usually occurs about 1 week before the Deputy Secretary's decision and gives the Army additional time to devise option strategies. When the Director of the Budget receives the advance PBD, it is reproduced and forwarded to the appropriate Army staff proponent. When the signed PBD arrives, the DAB is given a deadline for response. The response time given depends upon the date. In early November, a limit of 36 hours is common; in mid-December, average time allowed is 6 hours. In most cases, reclamas are prepared on PBDs because of errors in the PBD or because of new information not considered by the PBD.

The OSD analyst reviews the reclama and may adjust the PBD, adds the change control designators, and passes it back through the review chain. When the DEPSECDEF receives the PBD, a decision is made whether or not to involve the SECDEF. This is done only in especially difficult cases. After the service reclama is evaluated and a staff position is established, the OSD Comptroller passes the PBDs along to the DEPSECDEF who makes a final decision. The signed PBDs then go back to the Director of Army Budget. A separate PBD is developed for each budget activity. (For budget year 1983, 130 PBDs were generated. In addition, there were 92 amendments changing Army appropriations estimates and the particulars of specific programs.)

At no time during the process is the actual DRB, with its attendant service participation, convened as a decisionmaking entity. It is used only as an extraordinary measure to communicate major last minute changes in the budget by the President. After final decisions are made in the PBD process, the completed DOD budget goes directly to the EOP where OMB brings up any unresolved conflicts with DOD.

As the reclama process is taking place, the ODAB is also involved in developing the justification materials. This includes not only the justification books, but opening statements for the DAB, posture statements for the Chief of Staff, back up sheets, and responses to previous year reports and actions.

ARMY PPBES: BUDGET FORMULATION PHASE

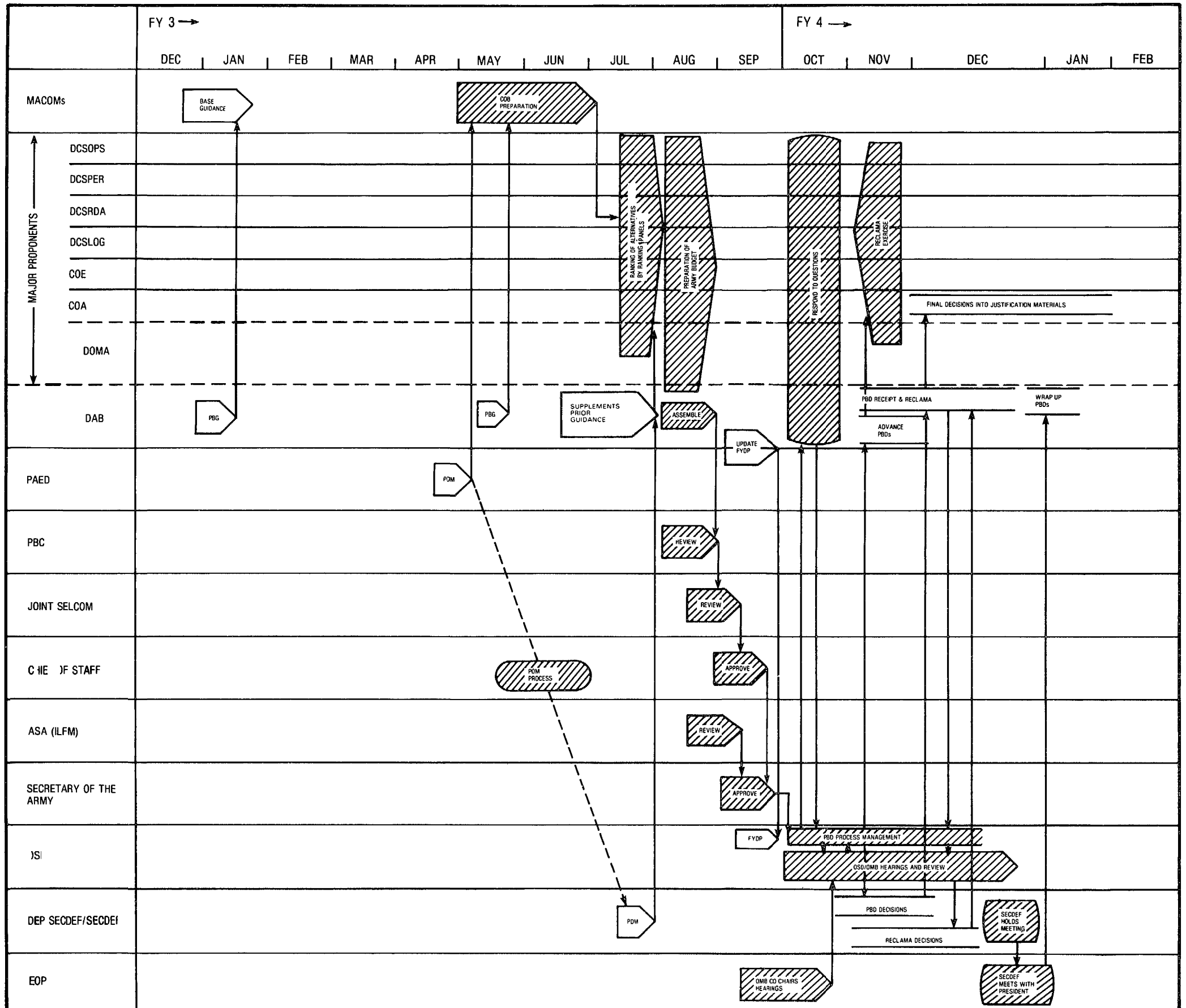

BUDGET EXECUTION PHASE

Planning for the execution year occurs simultaneously with the budget presentation process. The Command Operating Budget serves as a dual purpose document, containing both MACOM-proposed operating budgets for the budget year (FY 4) and their request for the budget year plus one. (Responsibility for the compilation, review, and refinement of COBs is described in the narrative on budget formulation.) Review of the execution year information results in an Army Execution Year Budget, put together by the Director of Army Budget. This budget incorporates changes in policy, priorities, economic factors, or congressional actions that necessitate revising the previous budget estimates. It serves as an execution plan indicating how the Army plans to utilize the funds it expects to receive from the Congress in the Army appropriations bills or continuing resolutions.

In the Army, the Appropriation Directors, the functional staff principals for each appropriation, play a key role in budget and program execution. During the budget review, Appropriation Directors submit apportionment requests. These requests are reviewed by the OSD Comptroller's office and then submitted to OMB.

Once the Congress passes the Army appropriations bills, the Department of the Treasury issues appropriation warrants authorizing the Army to expend funds. The warrants are reviewed by GAO and notification is sent to OMB and OSD. The warrants go to the U.S. Army Finance and Accounting Center (USAFAC), a subdivision of the Office of the Comptroller of the Army. Adjustments are made, as required, in approved operating budgets and these are reflected in the Army portion of the DOD-wide Expense Operating Budget maintained by OSD.

The schedule for these events will differ depending on the congressional timing for approving the appropriations bills. In principle, all of these activities should be completed by the beginning of the new fiscal year. However, if the appropriations are not passed until the last moment or if continuing resolutions are passed instead of appropriations bills, preparations for beginning the execution year will also be delayed.

The Army Fund Authorization Document serves as the basic authority for the allocation of funds to operating units. This document is maintained by USAFAC. However, the allotment of funds to the commands and agencies is the responsibility of the Appropriation Directors. They are also responsible for the distribution of program authority and for ensuring that funds are matched

to programs. For the O&M accounts, allotment dollars and program authority are distributed to the MACOMs and bases through a USAFAC Automated Program Fund Distribution Control System.

During the execution year, ongoing obligation, expenditure, and disbursement of funds are reported and reviewed in a variety of formats to meet a wide array of management and control needs. Monthly obligation and outlay data are reported to USAFAC where they are consolidated and compared with plans for monthly obligations and outlays. Deviations between plans and actuals are reported to Appropriation Directors and to the COA. The COA reports on the financial status of all appropriations at monthly execution briefings to top Army staff. Monthly reports on obligations and outlays are also sent to the Assistant Secretary of Defense (Comptroller) and to the Treasury Department.

In addition to financial accounting and reporting systems, numerous functional systems exist for recording and reporting on various aspects of program execution. These are aligned by function, and data are reported up functional channels.

Over the past several years, the Army has placed growing emphasis on including execution as a phase within PPBS. It is the first service to officially include an "E," renaming its process PPBES. Consistent with this emphasis, it has initiated a Program Performance Budget Execution Review System (PPBERS), a high level review of execution. Each quarter PPBERS compares, for a wide array of Army programs, actual program accomplishments with objectives set a year in advance. These reviews, organized by the COA, are made to the Joint Select Committee, with presentations made by the general officers responsible for each of the eight Army functions. The review includes an examination of both programmatic and financial performance for each area examined. PPBERS serves as a major point where assessments of budget and program execution can be related to future programming and budgeting phases.

The Resource Management Review (RMR), initiated by the PAED, provides another type of high level review. The staff principals make presentations on functional topics to the SELCOM. The RMR, in contrast to PPBERS, concentrates on an in-depth analysis of one or two special topics.

It may be necessary periodically to request reprogramming of available funds. While amounts below congressionally established thresholds may be reprogrammed without congressional notification, reprogramming above the

threshold requires prior congressional notification or approval. Reprogrammings involving transfers between appropriations all require congressional approval. Requests for supplemental funds may be made of the Congress. Changes in approved programs through reprogramming or supplementals are generally easier to obtain than the original funding. However, on occasion it may be very difficult to secure congressional approval, particularly when controversial programs are involved.

Throughout the execution year, evaluations and assessments of program execution are conducted at all levels within the Army. Additional evaluations, reviews, and audits are undertaken after the execution year is completed. Post execution reviews and audits are made by external groups, such as GAO, as well as by internal Army groups.

ARMY PPBES: BUDGET EXECUTION PHASE

(O&M Appropriations Only)

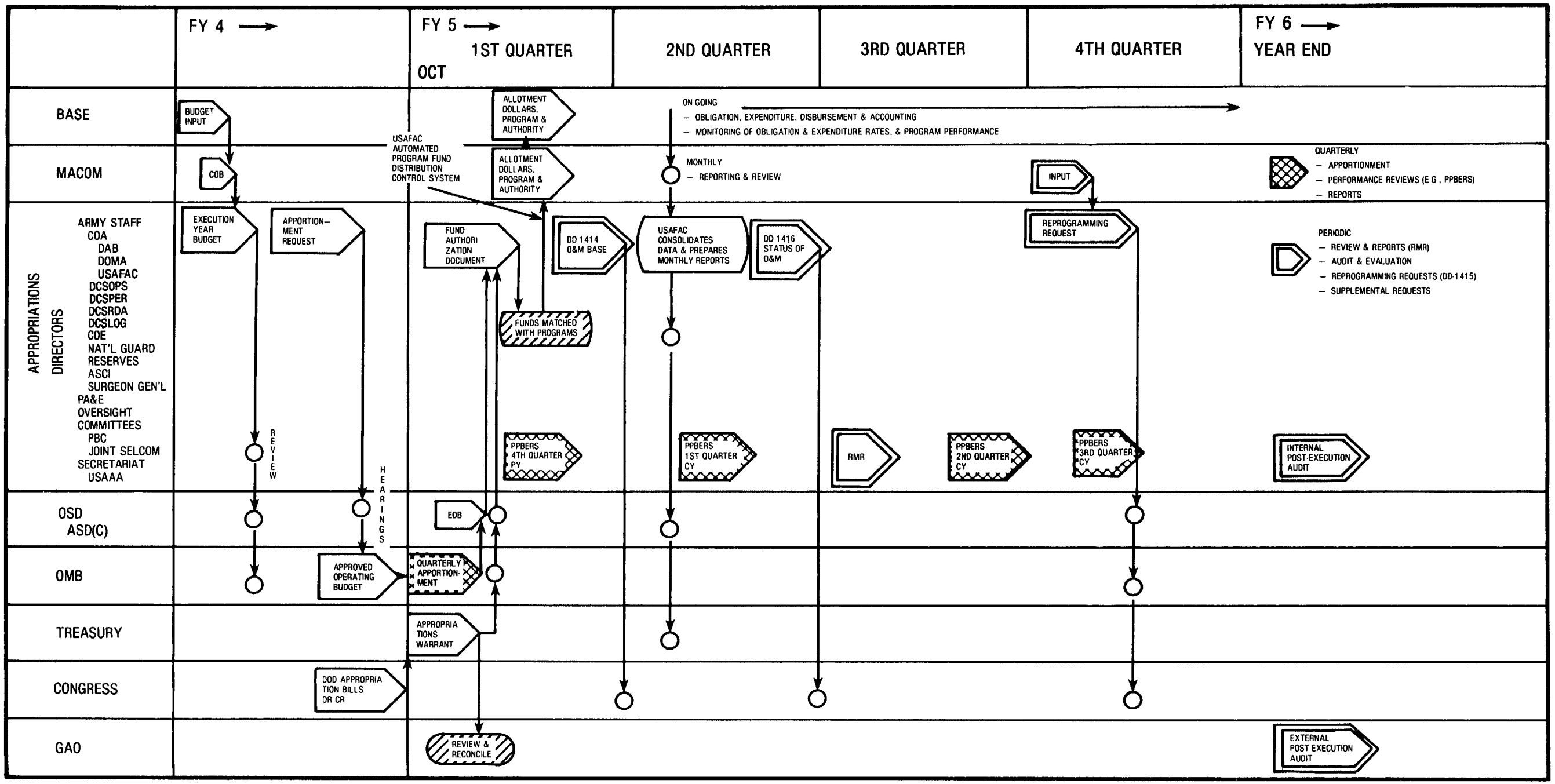

SECTION 4: NAVY PPBS

PLANNING-PROGRAMMING PHASES

The prime purpose of the Navy's planning efforts is to prepare for the programming phase of PPBS.

During the earliest stages of the planning process, the Deputy Chief of Navy Operations (DCNO) for Plans, Policy, and Operations (OP-06) prepares the Navy portion of two documents: the Joint Intelligence Estimate for Planning and the Joint Strategic Capability Plan. These items are submitted to the Joint Chiefs of Staff, where they are inserted into the JCS documents.

The DG (issued in January) is frequently regarded as the key link between planning and programming, and thus is the initial document of the programming phase for Navy PPBS. However, programming actually begins earlier than this, using the prior-year DG and early drafts of the current DG to generate the Maritime Strategy CNO Program Analysis Memorandum (CPAM) and the Preview CPAM, which are presentations that occur in August. The Preview CPAM is prepared by the Program Resource Appraisal Division (OP-91), based on prior-year and draft DGs, the prior-year Extended Planning Annex, investment decisions, and identified wartime deficiencies. It sets the framework for program planning, providing for overall naval balance based on the previous PPBS cycle and is primarily for the use of the Program Development Review Committee (PDRC), which includes the Resource Sponsors. The Maritime Strategy CPAM is also based upon input from the Commanders-in-Chief. It is prepared by the OP-06 and reviews the CINCs' war plans and defense scenarios regarding the employment of naval forces. The presentation is given to the PDRC, the CNO Executive Board (CEB), and the Secretary of the Navy (SECNAV).

With this guidance, and the subsequent directives (POM serials) issued by the Office of the Director of General Planning and Programming (OP-90), the Resource Sponsors begin formal preparation of their summaries of significant issues, a process that continues into January, using additional inputs.

The Navy uses the term "claimants" to refer to all its commands, bureaus, and offices which receive a share of the Navy budget and, in turn, distribute resources to lower echelons. Within the context of resource allocation and control, claimants are organizationally outside of OPNAV. Major Claimants are primarily first echelon operating forces and shore establishments. There are also large and powerful subclaimants. For example, the Atlantic fleet, a Major Claimant, has as subclaimants AIRLANT, SUBLANT and the Norfolk Naval

Base. These participate in planning only through the Major Claimant. Major Claimants have an opportunity to provide input to the Resource Sponsors about program and budget execution problems that may affect the Sponsor Program Proposals (SPPs) that are being prepared and are due in March.

The first major documents to be produced in this phase are the Baseline Assessments. Each Assessment Sponsor (OP-01, OP-04, OP-06, OP-09R, and OP-094) prepares a functional review of a separate area (manpower, logistics, readiness, reserves, North Atlantic Treaty Organization, mission support, and automatic data processing) based on current FYDP program and resource levels. These are distributed to OP-90 and to the Resource Sponsors in November.

Another series of presentations and memoranda, the Warfare Appraisals, is prepared by the Office of Naval Warfare (OP-095) to identify issues (needs) in individual warfare areas (strategic, anti-air warfare, anti-submarine warfare, strike/anti-surface warfare, mine counter-measures, amphibious warfare, and electronic warfare). These are based on analysis of current and projected force capabilities to counter perceived threats and to accomplish specific missions. The presentations are made early in December to the PDRC and the Program Review Committee, and a memorandum goes to the CNO. OP-095 subsequently prepares a Summary Warfare Appraisal presentation that summarizes cross-cutting warfare areas and major warfare issues. This is given to the PDRC and the CEB (with the CNO present) in January.

In December, the Program Resource Appraisal Division (OP-91) and the Director of Research, Development, and Acquisition (OP-098) prepare CNO Program Analysis Memoranda, which review the cross-cutting areas. Also in December, OP-91 produces the Baseline Task Area Assessment (BTAA) covering selected areas of review (e.g., training, in the POM 85 cycle) using the current FYDP program level. These also take the form of presentations to the PDRC and PRC, and memoranda to the CNO, and lay a foundation for the CNO Program and Fiscal Guidance (CPFG). The Resource Sponsors receive copies.

The following month, OP-098 presents Modernization Management Initiatives (MMI) to the PDRC, CEB, and SECNAV, which highlight OSD initiatives for DOD management and review and directions for RDT&E and acquisition. Also at this time, the Resource Sponsors present to the PDRC their Program Issues Summary. As stated previously, this presentation advises of the most significant issues that should be addressed in the program guidance. It also comments on the CPAMs and the Warfare Appraisals.

NAVY PPBS: PLANNING—PROGRAMMING PHASES

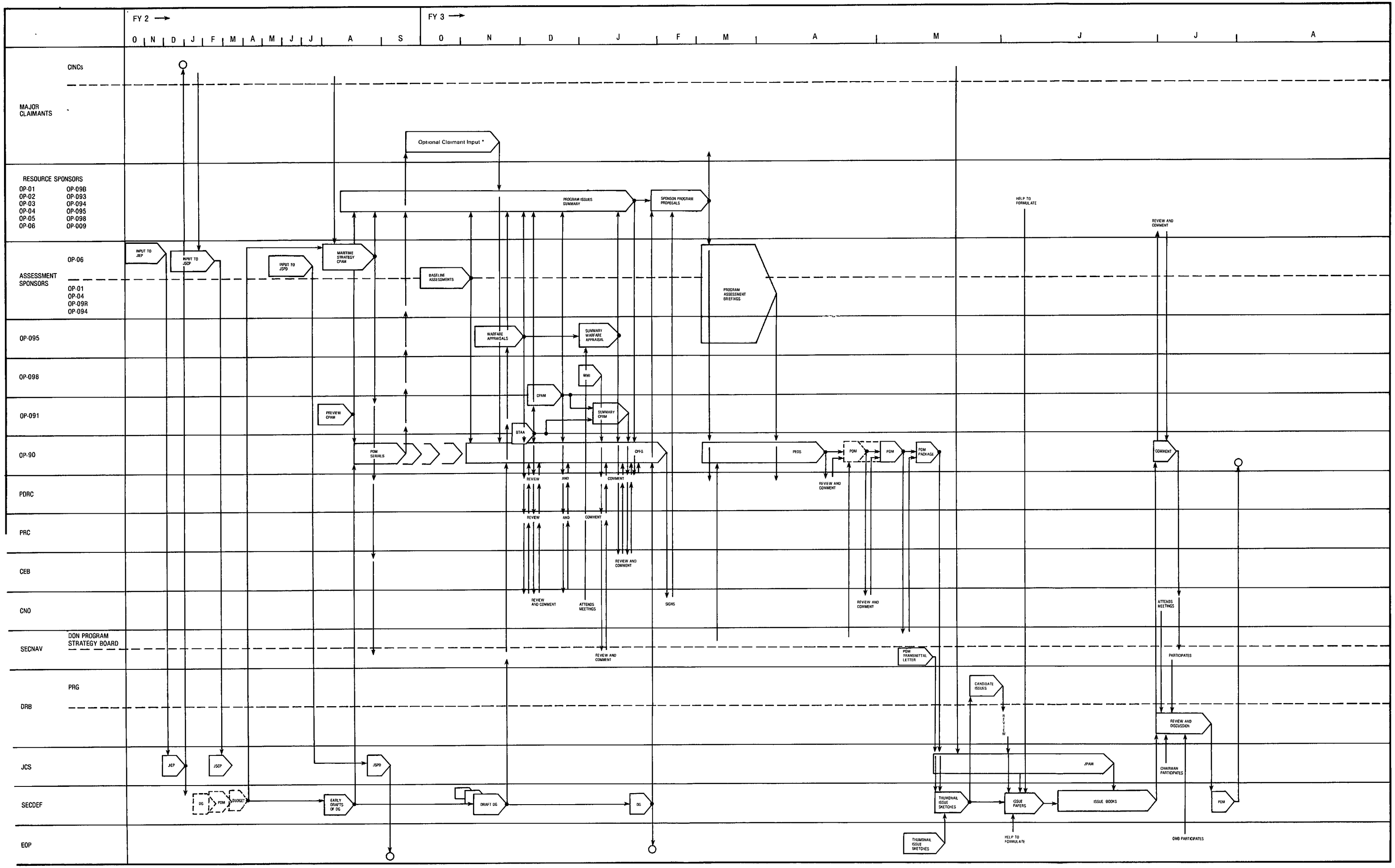

*SIBILITY COMMENTS

In February, based on all these inputs, all planning cycle information, CNO decisions, and the January FYDP, OP-90 produces (for the CNO's signature) the CPFG, a memorandum of detailed guidance for the Resource Sponsors to use in preparing their Sponsor Program Proposals, which are the basic building blocks for the POM. These consist of presentations, documentation, and the corresponding data base update, and are provided in March to the PDRC, OP-90, and the claimants. The Assessment Sponsors then individually review these proposals in the light of their original Baseline Assessments, and present their evaluation to the PDRC and OP-90 in April.

Over the next few weeks, OP-90 conducts a series of presentations, the Program Evaluation Decision Summary (PEDS). This adjusts program proposals in the light of the program assessments and overall balance, addresses unresolved issues, and produces a coordinated proposed POM that is presented to the CNO and SECNAV. This PEDS process requires negotiation and coordination with the PDRC. Final changes are made as a result of review by the CNO and/or SECNAV before the POM package is transmitted to the SECDEF about the second week in May. During this final assembly of the Department of the Navy Program Objective Memorandum (DON POM) package, the Marine Corps POM segment is meshed with the Navy POM segment, with minimal integration (e.g., interweaving separate line items within a common appropriation). This is performed by the Department of the Navy Program Information Center (DON PIC). The Marine Corps POM segment is prepared independently, and the process is separately charted in section 6 of this appendix.

BUDGET FORMULATION PHASE

In mid-May of FY 3, the Navy Comptroller (NAVCOMPT) issues budget guidance and a call for budget estimates that reflect program and fiscal levels contained in the May POM submission. Throughout May and June, Major Claimants develop budget estimates that then go to the Office of Budget and Reports (OBR) in NAVCOMPT by early July. The OBR is directly responsible for the budget review. When the OBR receives these submissions, it holds hearings to review them with the claimants. Following those hearings, the OBR prepares a "mark-up," or recommended budget, that often includes changes to the submitted budget estimates. A full appeals process is then conducted, with a final right of appeal to the CNO/CMC. (The Director of Navy Program Planning is responsible for coordinating the resolution of Navy differences, his counterpart being the Fiscal Director within the Marine Corps.)

In early August, the OBR incorporates the PDM decisions into the budget. After the appeal process, the OBR assembles the budget detail for presentation to the Secretary of the Navy. The OBR makes any changes directed by the Secretary, and the full budget is then transmitted to the OSD Comptroller. The Navy budget reaches OSD as a transmittal letter, hard copy summary information, and a tape containing the technical budget detail, followed by the required budget forms and schedules. (The FYDP is then updated.) The OSD Comptroller then circulates the Navy budget among the appropriate OSD-level functional staff. The staff analyst in the Comptroller's office responsible for each Program Budget Decision holds hearings, which are co-chaired by OMB, and appropriate service functional staff testify. The PBDs are then circulated in a multiple option format, with major dissents noted, and OSD staff-- plus OMB--indicate alternatives. At the same time, an "advance" copy of the PBD is sent to OBR, showing options but not the alternatives selected. This is available as much as 1 week before the DEPSECDEF makes a final decision.

The issue at this point is whether or not to agree with the PBD. The OBR acts as a control point in this process. When the advance PBD is received, it is passed on to the appropriate claimant, who decides upon and writes the reclama, if that course is chosen. The appropriate Resource Sponsor then reviews, edits, and approves the reclamas and passes them on to the OBR, which also reviews, edits, and approves. The reclama, if approved, is then forwarded to OSD.

The appropriate OSD analyst reviews the reclama, either adjusts the PBD or not, and passes it back through the OSD review chain. Upon its receipt by the Deputy Secretary, a decision is made whether or not to involve the SECDEF. (This is done only for major issues.) The DRB, with its attendant service participation, does not generally participate in the detail PBDs, but only as an extraordinary measure to communicate major changes in the budget, including those directed by the President. After final decisions are included in PBDs, the completed DOD budget goes to the Office of the President, where remaining differences with OMB are resolved. The SECDEF meets with the President (and OMB) in mid- to late December, and final (wrap-up) PBDs are written after that meeting. Just before this meeting, the SECDEF and the military department secretaries meet to identify and settle on the major issues.

DEPARTMENT OF THE NAVY PPBS: BUDGET FORMULATION PHASE

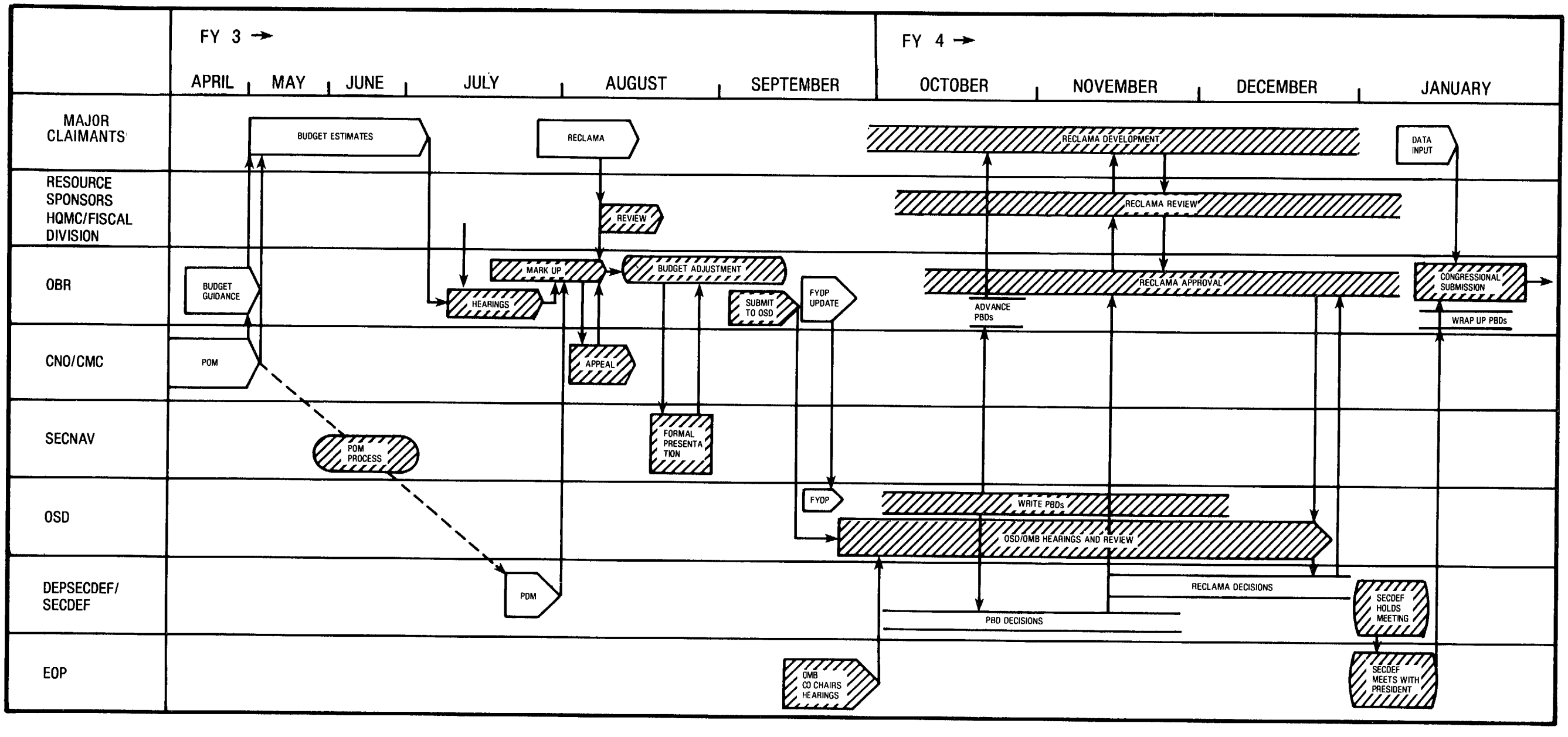

As the reclama process nears completion, the OBR is also directing the development of the justification materials, with input from the claimants. These materials include not only the justification books, but also the overview statements for the Secretary of the Navy, the Chief of Naval Operations, and the Commandant of the Marine Corps, as well as the Director of Budget and Reports.

BUDGET EXECUTION PHASE

Planning for the execution year occurs as a part of the budget formulation process. The budget call issued by the Navy Comptroller in May requests budget estimates for the approaching execution year (FY 5) as well as for the budget year (FY 4). Budget submissions from subclaimants include a proposed operating budget for the coming year, which serves as an annual plan for operations. Budget estimates are developed by Major Claimants and submitted to the NAVCOMPT Office of Budget and Reports. The process for reviewing and revising the budget for the apportionment year is as described in the Navy Budget Formulation portion of this appendix. NAVCOMPT submits apportionment requests for the O&M appropriations to OSD and OMB. Following hearings and review, OMB approves the operating budget for the execution year. This is revised, as required, to reflect congressional action on the appropriations bills.

Once the appropriations bills are passed by the Congress, the Department of the Treasury issues appropriation warrants making appropriated funds available for apportionment and allocation. The warrants are reviewed by GAO and sent to the Department of the Navy with notification to OSD and OMB.

OMB issues quarterly apportionments of the O&M appropriations. These apportionments are reflected in the DOD-wide Expense Operating Budget. The apportionment process is basically designed to control the rate of obligation of approved funds.

The allocation process is used to ensure that congressional intent is followed in the use of funds below the appropriation level by controlling the total amount of funds used for a particular budget activity during the year. In the Fiscal Management Division, OP-92 makes interpretations of congressional intent and submits allocation requests by budget activity to NAVCOMPT, which allocates funds by amounts and specific subheads.

The approved operating budgets are the means of granting obligational authority for Navy O&M accounts. This approved operating budget becomes the execution plan, and if the approved plan does not agree with the submitted plan, revisions must be made to the submitted plan. Obligational authority is passed from the Major Claimants to the subclaimants through operating budgets, expense limitations, or operating targets.

Ongoing obligation, expenditure, and disbursement of funds are tracked and monitored throughout the execution year. Actual obligations and expenditures are compared to approved plans, and deviations are reported to higher authorities. Review of budget execution in the Navy is a centralized process with major control responsibility residing in NAVCOMPT. Monthly reports are consolidated by OBR, which follows the rates of obligation and expenditure and reports on these to OSD, OMB, and the Treasury. NAVCOMPT reviews obligations and expenditures at the appropriation and budget activity level. This is a continuing staff process that measures performance against plans and brings variations to the attention of investigators and managers.

A major review of budget execution is conducted mid-year. Actual performance is compared to plans, and managers attempt to determine the reasons for variances and to recommend remedial action. NAVCOMPT has a major role in the mid-year budget review. Information from internal audits or other program assessments may be used by budget analysts in this review.

Periodically, it may be necessary to reprogram available funds or to request supplemental funds from the Congress. Reprogrammings involving amounts below congressionally established thresholds can be completed without notifying the Congress. Larger reprogrammings require either prior congressional notification or approval. The reporting system to inform the Congress of changes in the O&M base, of significant reprogramming requests, and of the status of the O&M accounts constitutes an increasingly important system for internal control in the Navy.

DEPARTMENT OF THE NAVY PPBS: BUDGET EXECUTION PHASE

(O&M Appropriations Only)

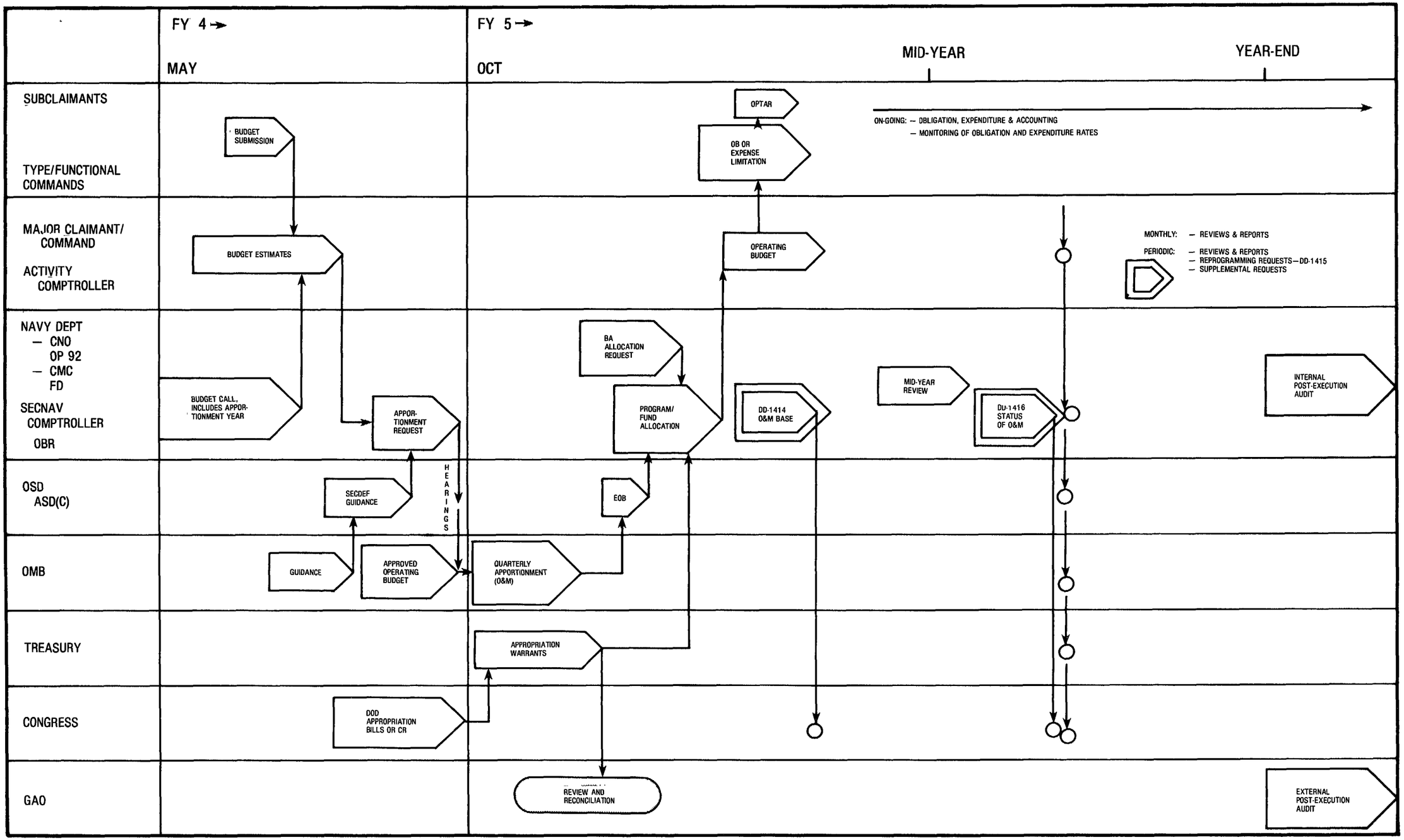

SECTION 5: AIR FORCE PPBS

PLANNING PHASE

The Air Force starts the planning phase of the PPBS earlier than either of the other two military departments. The first action is the generation of a threat assessment by the Air Force CINCs and major commands (MAJCOMs), using information available from the various intelligence gathering and evaluating services. The Air Staff then use the MAJCOM inputs in producing the Global Assessment. The JCS use the CINC inputs in the preparation of the Joint Intelligence Estimate for Planning (JIEP) and the Joint Strategic Planning Document, Supporting Analysis, Part I (JSPDSA I).

The Global Assessment provides input to the Air Force Planning Guidance Memorandum (PGM) and sets the initial framework for developing Program Decision Packages (PDPs). The PGM prepared by the Secretary of the Air Force (SECAF) and the Chief of Staff of the Air Force (CSAF), contains the top down directions concerning Air Force objectives and priorities for the effort that is to follow. This document is distributed both to the personnel of the Air Staff and to the MAJCOMs.

In the first quarter of FY 2, the JCS issue the JIEP. Developed in an interactive and iterative manner, this document incorporates inputs from all services. The JIEP provides an estimate of the threat both in the short- (up to 1 year) and the mid- (2 to 9 years) range.

The JIEP presents the JCS' view of the threat on both a global and a regional basis. The JSPDSA I provides the services and the CINCs with scenarios, strategy, and planning guidance for the purpose of allowing the individual services and the Unified and Specified Commands to develop force requirements for the next 2 to 9 years.

The Air Staff, employing the PGM and JSPDSA I, as well as the previous year's documents, then prepare the Strategic Force Capability Plan (SFCP). This document is used by all segments of the Air Force, as well as the JCS, to prepare the next sequence of documents. The SFCP provides input to the CINCs and MAJCOMs for the preparation of their PDPs, to the Air Staff for developing the Planning Input for Program Development (PIPD), and to the JCS for the generation of the JSPDSA II.

AIR FORCE PPBS: PLANNING PHASE

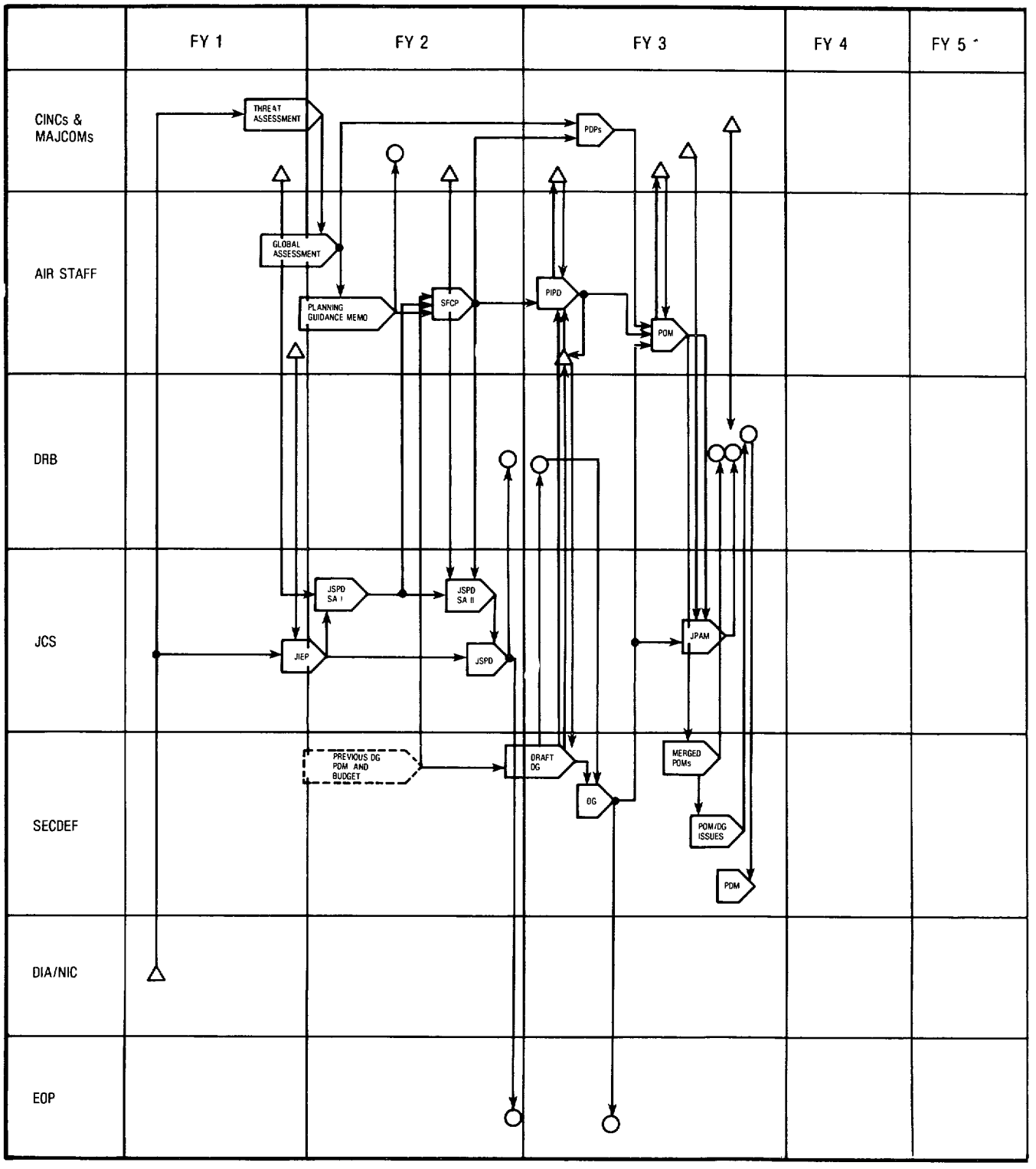

The JCS, after the JSPDSA II has been issued, integrate the output of that document with the results of the JIEP to generate the Joint Strategic Planning Document (JSPD) in September of FY 2. The importance of the JSPD is in the use made of this document by the DRB during its examination and review of the DG.

Simultaneous with the DRB review, the Air Staff is assembling the PIPD. This document is generated in an interactive manner, employing inputs from the MAJCOMs as well as from various Air Staff personnel and the draft DG. The PIPD is a critical link between the draft DG (which is being developed by OSD at this time), the MAJCOMs, and the Air Staff.

The issuance of the DG in January of FY 3 begins the formal programming phase of the PPBS process. At this point, the Air Force has all the inputs that are required to proceed with the development of the POM.

PROGRAMMING PHASE

The chart of the AF programming activities for the FY 5 budget starts with FY 2. The Air Staff produce the PGM around the end of January, to provide the major command planners with broad "top down" guidance from the SECAF and the CSAF. This guidance is based on the prior year's DG--the nominal link between planning and programming. Starting as early as the following June, the Air Staff provide the MAJCOMs early guidance for the POM. By October, they will receive final guidance. Working from these guidelines, as well as the prior year's PDM (not shown), the MAJCOMs put together their PDPs, documents that describe the current program plus proposed alternatives. Each PDP describes an independent portion of the Air Force program in terms of the resources needed for that portion. Impact information (advocacy) is also included as a separate part of the package. The PDPs are due at Air Force headquarters the following January.

The Air Force has a unique Corporate Board Structure (CBS) responsible for decisionmaking during POM development. Each level functions as a screening/recommending agency for higher levels. Each level can refer to the functional staff, and its members are drawn from the functional staff. The lowest level consists of 13 panels, organized by mission or special interest area. These panels are chaired by senior colonels, and their members are field grade officers and civilian equivalents.

At the next level, four committees, chaired by generals and with members who are colonels or civilian equivalents, evaluate and integrate panel input.

The Security Assistance Committee (not shown on chart) develops recommendations in the special interest, foreign military sales area. The Force Structure Committee develops recommendations on the size and mix of forces to carry out assigned Air Force missions. The Operating Budget Review Committee (OBRC) is concerned with the operating appropriations. The Program Review Committee (PRC) is the unifying element, making recommendations on the entire AF program.

Each panel and committee is a "mini-Air Staff," with representation from all functional areas, thus ensuring that all aspects of any specific program proposal are considered before making recommendations "up the chain."

The Air Staff Board is chaired by the Director of Programs. It functions as an Air Staff Directorate level (two-star) corporate board, reviewing PRC input and providing overall program recommendations to the Air Force Council. The Council is chaired by the Vice Chief of Staff, with membership at the Deputy Chief of Staff (three-star) level. It is the final corporate review body, making recommendations to the CSAF and the SECAF.

When the PDPs arrive in January, they are distributed among the appropriate panels: strategic offense; tactical; mobility; strategic defense; support; command, control, and communication; electronic combat; research, development, test, and evaluation; reconnaissance and intelligence; space; data automation; war reserve material; and personnel activities. Each panel evaluates the PDPs for which it has responsibility, creates an integrated, balanced program, and briefs the PRC. The MAJCOMs also participate in these briefings. The early briefings concentrate on PDPs addressing disconnects between the FY 5 and FY 4 columns for FY 4 in the President's budget. Subsequent briefings center on PDPs reflecting initiatives to the FYDP period for years 5-9. The PRC then produces the first Air Force-wide integrated program listing. However, the total aggregate cost of these programs is approximate and does not precisely meet the Air Force's fiscal guidance level. A series of exercises is then undertaken to refine and revise the program and its cost estimates in response to PRC guidance aimed at retaining program balance among mission areas, between force structure and support, between readiness and modernization, etc. The number of exercises is variable (usually two or three) depending on the number of iterations necessary to finalize the actual POM submission.

AIR FORCE PPBS: PROGRAMMING PHASE

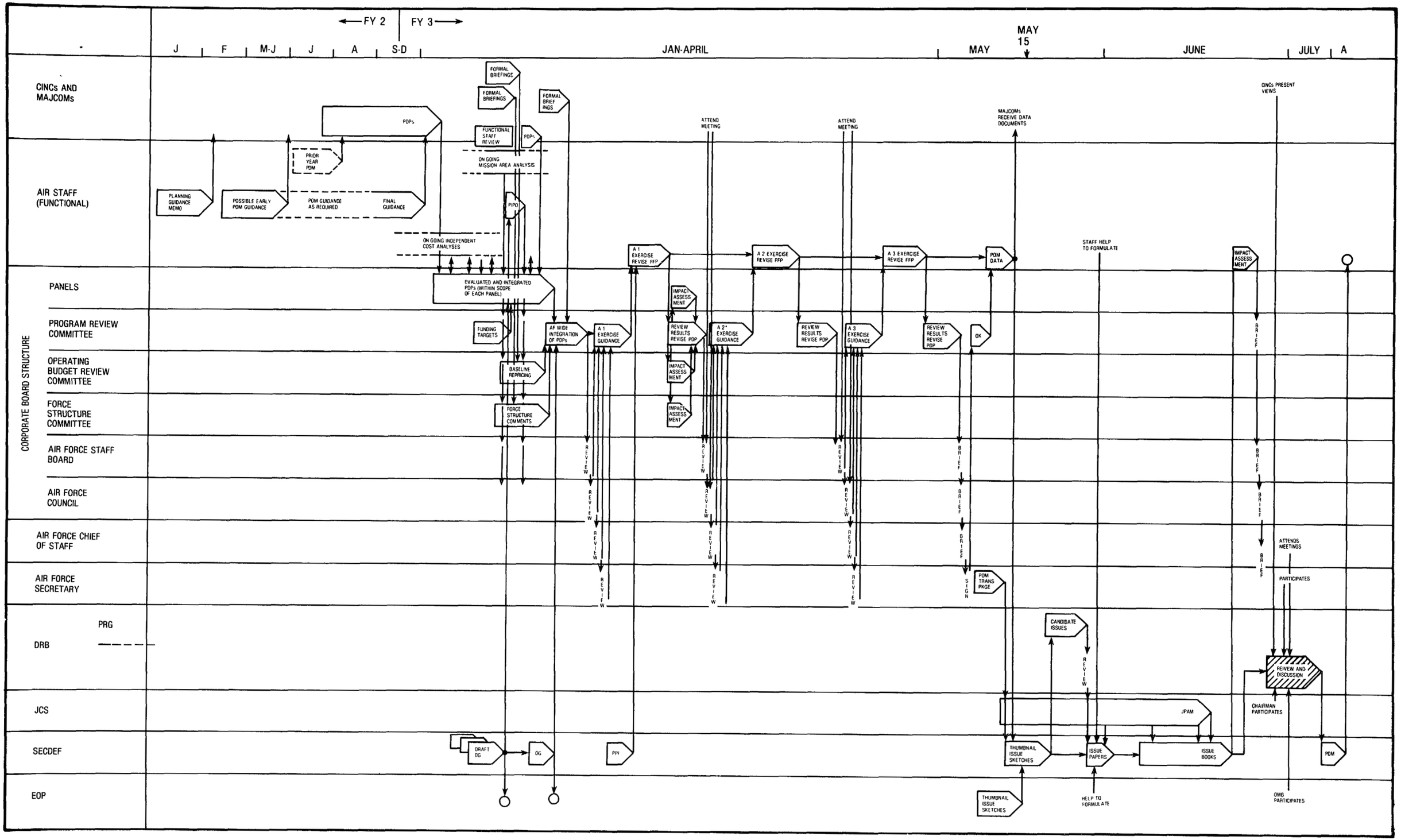

*NUMBER OF EXERCISES VARIES AS NEEDED

The initial program listing is briefed through each level of the CBS and to the CSAF and SECAF. With the guidance received from these briefings, the PRC issues instructions on the changes required to achieve the revised program for staff implementation. Each office with a functional impact inputs applicable data into the exercise data base and verifies the pricing to produce a new baseline for continued POM development. Results are briefed through the Board Structure, with MAJCOM representation at the Air Staff Board and Air Force Council levels. After the second exercise, MAJCOMs are again represented during both Staff Board and Air Force Council review. A third exercise may or may not be needed.

When all levels approve the proposed program, the POM package is prepared in accordance with OSD's POM Preparation Instructions which were provided to the services in February. The POM is submitted to OSD around mid-May, and consists of hard copy documentation as well as a net-change (delta) computer tape that identifies the changes between the approved January FYDP and the May POM. A transmittal letter from the Secretary briefly highlights significant components of the total Air Force program.

The OSD review process (May-August) shown on the chart was previously described in section 2 of this appendix.

BUDGET FORMULATION PHASE

The Air Force budget formulation process starts late in the second year of the PPBS cycle at the major commands. At that point, those already approved programs contained in the outyear of the 5-year Air Force cycle are repriced (specifically, the outyear figures of the preceding cycle's Budget Estimate Submission (BES)). After being cycled through the Operating Budget Review and Program Review Committees, the repriced items continue on as part of the POM process and are finally reflected in the August Program Decision Memorandum. The PRC is responsible for drafting Exercise Guidance for the Corporate Board and also for overall BES management. (The Exercise Guidance is a specific implementation document in which the PDM and "fact-of-life" changes have been combined.) The PRC assesses the impact of the PDM-mandated changes, cost updates, and fact-of-life changes to devise a preferred solution. The PDM is then translated into the new BES by the AF Corporate Board Structure. The degree of involvement of the lower CBS components is dictated by the number, complexity, and magnitude of the changes made in the POM during the PDM process. The PRC and higher CBS components participate in the BES process regardless of these factors.

The BES reaches OSD as a transmittal letter, hard copy tables, and a "delta" tape. This tape contains the update of the Force and Financial Plan (FFP) which is used in turn to update the FYDP. The OSD Comptroller then circulates the BES among the appropriate OSD functional staff. The staff person responsible for each Program Budget Decision holds hearings, which are co-chaired by OMB, and appropriate service functional staff testify. The PBDs are then circulated in a multiple option format, with major dissents noted. OSD staff--plus OMB--indicate preferences. At the same time, an advance copy of the PBD is sent to the Air Force, showing options but not the "votes". This usually occurs about 1 week before the DEPSECDEF decides on the PBD and gives the Air Force additional time to devise option strategies. Since a separate PBD is developed for each budget activity, normally 200 PBDs are generated during this 2 1/2 month period. (This number is increased by the changes and reclama to each PBD, and the total number of items may reach 350-400.) The decision to reclama is made at the two-star level by the Budget Review Board (BRB). (Membership of the BRB is identical to that of the Air Staff Board in programming, except that the Director of Budget now chairs the almost daily meetings.) The review board draws on functional expertise from the various panels, as appropriate, and from the major commands, when necessary. The decision is made in the form of an option strategy based on the alternatives stated in the advance PBD.

The signed PBDs go to the AF Director of Budget and are distributed Air Staff-wide. Every week copies of these PBDs are sent to the MAJCOMs for their information. They are given a specified period in which to appeal the signed PBD (usually 48 hours up until mid-November, and 24 hours after that). If the decision is a new alternative, the PBD goes back to the BRB for reconsideration. If there is an appeal, it ends up with the OSD analyst who wrote the original PBD. For all signed PBDs, the Director of Budget staff assigns a change control number, and the PBD is circulated to the appropriate functional staff to make budget and program changes accordingly. Throughout this process, and as each PBD is made final, the justification materials are being developed, and the Air Force portion of the FYDP is being updated.

If the Air Force writes a reclama, the OSD cycle is repeated. In January, the completed DOD budget goes to the Executive Office of the President for resolution of remaining issues with OMB, and is then presented to the Congress. Justification materials are forwarded to congressional committees as they are completed, normally in March.

AIR FORCE PPBS: BUDGET FORMULATION PHASE

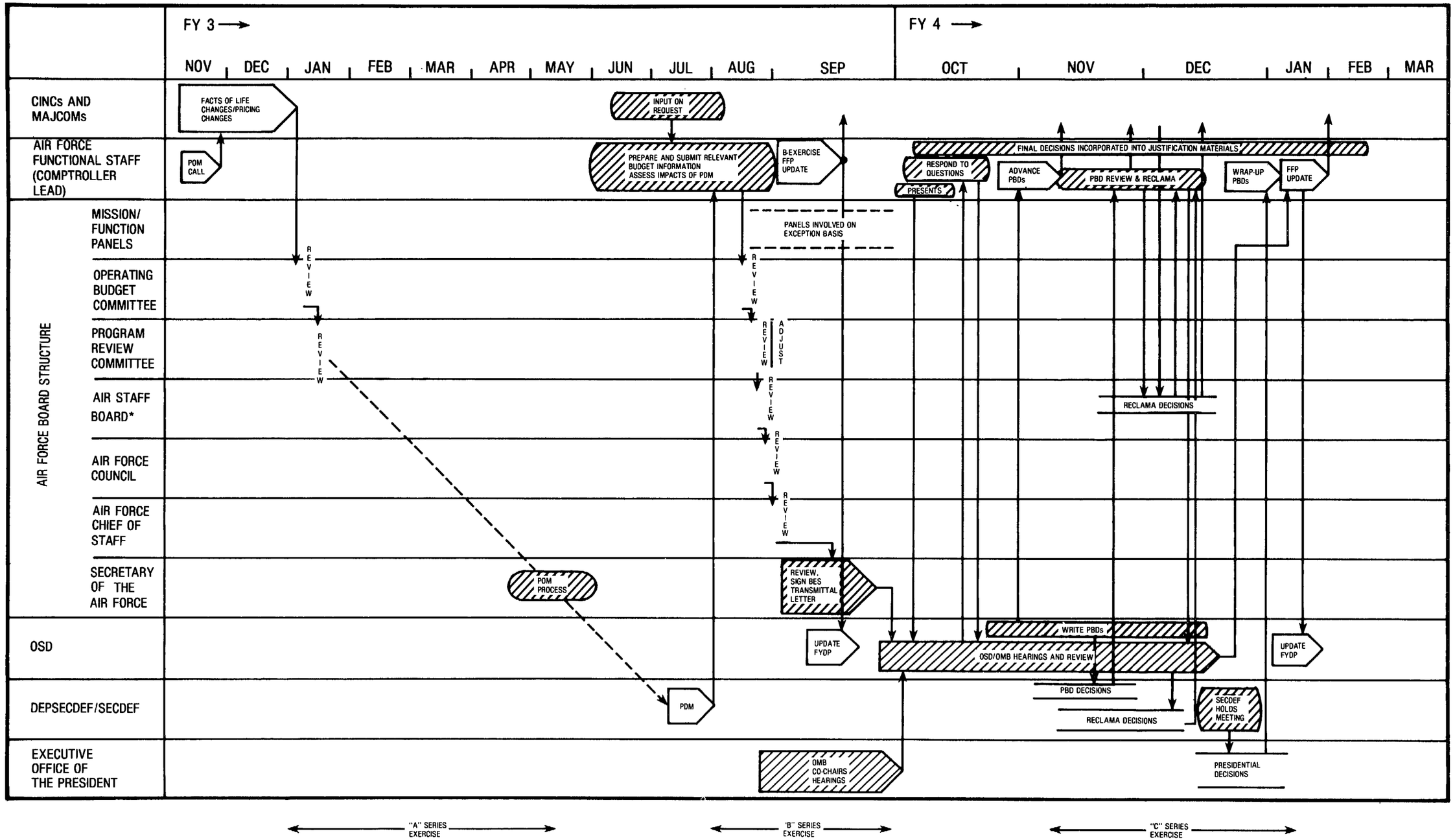

*FOR THE "C" SERIES ONLY, THE "AIR STAFF BOARD" BECOMES THE "BUDGET REVIEW BOARD," CHAIRED BY THE COMPTROLLER

BUDGET EXECUTION PHASE

The establishment of an Air Force financial plan for the execution year occurs as a part of the budget formulation process. As the budget for the budget year (FY 4) is being developed, the financial plan for the execution year (FY 5) is also being completed. In March, the Comptroller of the Air Force issues budget guidance and a call for financial plans for the coming year to the CINCs and MAJCOMs who, in turn, issue the call to the base and operating command level. During the April-June period the base level commanders and their financial staffs determine their proposed distribution of funds and incorporate these in the base financial plan. These base-level plans are reviewed by the appropriate MAJCOM and included in the command financial plan. In July, an Air Force financial plan for the execution year is completed by the Comptroller. The plan is reviewed and approved by the Operating Budget Review Committee. The OBRC is the newest committee added to the Air Force Corporate Board Structure, reflecting a growing commitment to high-level review of execution processes.

The Air Force financial plan for the execution year is revised as required throughout the summer to reflect congressional changes in appropriations bills or changes in economic conditions. Apportionment requests are developed and submitted, through OSD, to OMB. Following the budget hearings, OMB approves an operating budget for the coming year.

When the Congress passes the appropriations bills, the Treasury issues warrants for each of the appropriations. The warrants are reviewed by GAO and forwarded to the Air Force through OSD and OMB. OMB issues quarterly apportionments for the O&M accounts. Required adjustments are made to the DOD-wide expense operating budget in OSD.

The Comptroller's office maintains the Air Force Operating Budget Authority Document and the Budget Allocation Document. Using an automated system, dollars and authority at the program element level are passed on to the MAJCOMs, and from MAJCOMs to the base and operating command level.

The control and review of budget execution for O&M accounts in the Air Force is more decentralized than in the other services. Primary responsibility for budget execution monitoring and review rests with the base commander. Monthly reviews of execution are made by base-level financial review groups with results reported up functional as well as financial channels. Monthly financial reports on obligation and expenditure rates are reported up to the MAJCOMs, Air Staff, OSD, OMB, and Treasury.

Budget execution reviews are conducted quarterly by the MAJCOMs. Results are reported to the Air Force Comptroller's office. Additionally, a quarterly report on the status of the O&M accounts must be submitted to the Congress.

Special reviews and reports may be conducted, as required, throughout the year. Significant variation between financial plans and actual obligations and expenditures may result in special reviews or audits. Such deviations from plans are also likely to be addressed as a part of the deliberations of the Air Force Corporate Board Structure. Again, the establishment of the OBRC heralds a growing concern with execution review.

Periodically, it is necessary to request reprogramming of available funds or supplemental funds from the Congress. Prior notification or approval of the Congress is required to reprogram funds above a congressionally established threshold.

Generally, budget execution and review is a dynamic process requiring ongoing review and adjustment of financial and program plans in light of execution realities.

AIR FORCE PPBS: BUDGET EXECUTION PHASE

(O&M Appropriations Only)

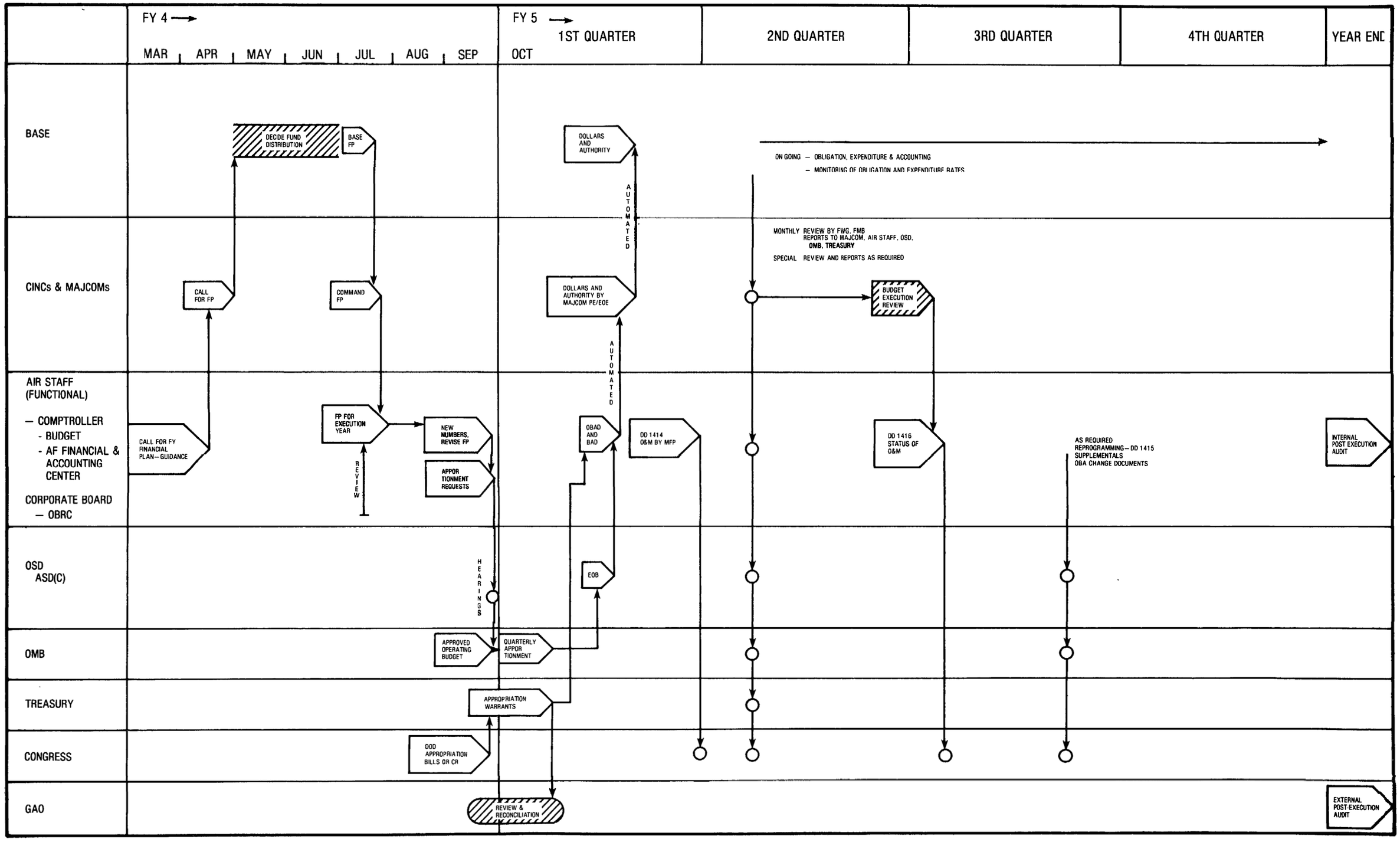

SECTION 6: MARINE CORPS PPBS

PLANNING-PROGRAMMING PHASES

The Marine Corps portion of the DON POM is independently developed within fiscal constraints and is merged into the DON POM before it is submitted to the SECDEF. The Marine Corps is responsible for programming (within its TOA) "green" dollar resources (military personnel; reserve personnel; operations and maintenance; operations and maintenance, reserves; procurement; and Marine Corps stock fund), which represent the Marine Corps appropriations. The Marine Corps also programs that portion of the "blue" appropriations that are in support of the Marine Corps but are executed by the Navy.

The Marine Corps has two basic planning documents. The first, the Marine Corps Long Range Plan (MLRP), is prepared once every 5 years. The second, the Marine Corps Mid-Range Objectives Plan (MMROP), is developed each year.

The MLRP is generated by the Marine Corps Development and Education Command (MCDEC) and is reviewed and approved by the Deputy Chief of Staff for Plans, Policy, and Operations. The MLRP focuses 10-20 years in the future.

The second Marine Corps planning document, the MMROP, is prepared and issued annually. One of the primary sources employed is the previous year's MMROP. Another input source is the JSPDSA I. The development process begins during the summer and culminates with the release of the MMROP (signed by the Commandant of the Marine Corps (CMC)) on October 1.

The MMROP, which addresses the 1-10 year timeframe, provides the Marine Corps inputs to both the JSPDSA II and the JSPD. It also provides: (1) mid-range goals and requirements to Marine Corps planners and programmers; (2) a comparison of Marine Corps mid-range Planning and Programming Forces; (3) direction for research and development programs; and (4) national Marine Air/Ground Task Forces (MAGTFs), including lift requirements.

The seven sections of the MMROP are presented in a logical sequence that begins with intelligence estimates, develops necessary force levels, and builds up to a presentation of Marine Corps mid-range requirements. These sections are as follows:

1. Section I sets forth the purpose and scope of the MMROP.
2. Section II provides global and regional intelligence estimates for the mid-range period.
3. Section III summarizes the U.S. military strategy and force planning guidance.

4. Section IV states Marine Corps functions, objectives, and planning guidance for the mid-range period.
5. Section V develops Marine Corps force level requirements and provides the Marine Corps Planning Force level necessary to carry out the national military strategy with a reasonable assurance of success. It also assesses the risk associated with the Programmed Force capabilities.
6. Section VI compares Planning Force requirements with program capabilities and sets forth the requirements needed by the Planning Force to execute the national military strategy.
7. Section VII presents tables showing the Marine Corps organization, Planning Force structure, and national MAGTFs.

The Deputy Chief of Staff for Requirements and Programs Division is the staff agency within the Marine Corps responsible for the development of the Marine Corps POM submission. The POM development cycle begins in July with a Summer Planning Conference (not shown on chart) attended by action officers (Majors and Lt. Colonels) from Marine Corps Headquarters. Strategy and improvements to the previous POM development procedures are identified during this working conference. The programming phase officially commences in September with the results of the prior year PDM and the issuance of the initial POM serial, CMC's Guidance. This serial provides the Commandant's programming guidance to the staff and identifies issues for development. POM serials for other specific areas (Procurement, Operation and Maintenance, Civilian Personnel, etc.) are published in detail later in the preliminary and final POM development phases. Based upon CMC guidance, the Marine Corps Headquarters normally develops military manpower structure requirements in the Preliminary Program Development Phase (September-December).

Program and functional sponsors submit structure initiatives, in priority sequence, to alleviate deficiencies in light of the threat. These are "wish lists" for structure requirements to conform to the Commandant's guidance. The Program Sponsors are Deputy Chief of Staff (DC/S) for Manpower; DC/S for Installations and Logistics; DC/S for Reserve Affairs; DC/S for Aviation; DC/S for Plans, Policies, and Operation; DC/S for Training; Director, Intelligence; and Director, Command, Control, Communications, and Computers (C^4). These same individuals are members of the Chief of Staff's Committee (C/S COMM), the highest level planning, programming, and budgeting forum within HQMC, which determines the MC program, including alternatives, to be submitted to the CMC

for approval. Also on the C/S COMM are the Assistant Commandant and Chief of Staff (who chairs it); the Fiscal Director of the Marine Corps; DC/S for Requirements and Programs; DC/S for Research, Development and Studies; and the Commanding General, Marine Corps Development and Education Command (associate member). The structure initiatives from all the sponsors are then prioritized by a Program Evaluation Group (PEG) and merged into a single list. A PEG consists of personnel familiar with the POM process, possessing experience across the full spectrum of Marine Corps capabilities, who are not assigned as program or functional sponsors (i.e., are not advocates). The initial list is submitted to the POM Working Group (PWG) as a starting point for discussion. A recommended program is then developed by the PWG through negotiation.

The PWG is the action officer level (Major/Lt. Colonel) POM development committee. It is chaired by a representative from the Requirements and Programs (R&P) Division with members from each of the Deputy Chiefs of Staff and selected divisions. The PWG's recommended program and issues are briefed to the Program Coordination Group (PCG) for review/approval and refinement/decision on any major issues. The recommended program is then briefed to the C/S COMM. The PCG comprises the deputy level personnel of the departments/divisions represented on the C/S COMM. Its function is to resolve all but the most significant issues and assess overall program balance. The list may be modified or sent directly to the C/S COMM before being signed (about December) by the Chief of Staff.

Once the structure decision is accomplished by CMC, initiatives to support/enhance that structure are submitted in response to specific POM serials, using the FYDP program as a base (January-May). The Program Sponsors refine and submit their proposals (initiatives) for other areas: Operation and Maintenance, Military Personnel, Procurement, Reserve Personnel, O&M Reserves, Military Construction, and Family Housing. These are submitted in February. Proposals for existing programs go directly to the PWG, which starts to build a base program. The program provides sufficient resources from each appropriation to sustain the Marine Corps at prescribed readiness and sustainability levels. Initiatives are prioritized above this program using the same process as previously stated, with the sponsor prioritizing his initiatives and briefing the initiatives to the PEGs. The PEGs are again convened by DC/S R&P to consider these new initiatives and to prepare an initial strawman of prioritized initiatives to send to the PWG.

The PWG uses the strawman as a starting point from which it develops a recommended POM that is balanced across the four capabilities--readiness, sustainability, modernization, and force structure. The recommended program with outstanding issues is then briefed to the PCG for refinement before presenting it to the C/S COMM for final approval and before briefing it to the Commandant. The Commandant gives the sponsors a final opportunity to provide input before approving the total program around the third week in April. The actual POM package (hard copy plus FYDP update tapes) goes to the Department of the Navy Program Information Center early in May to be merged with the Navy segment to form the DON POM.

MARINE CORPS PPBS: PLANNING-PROGRAMMING PHASES

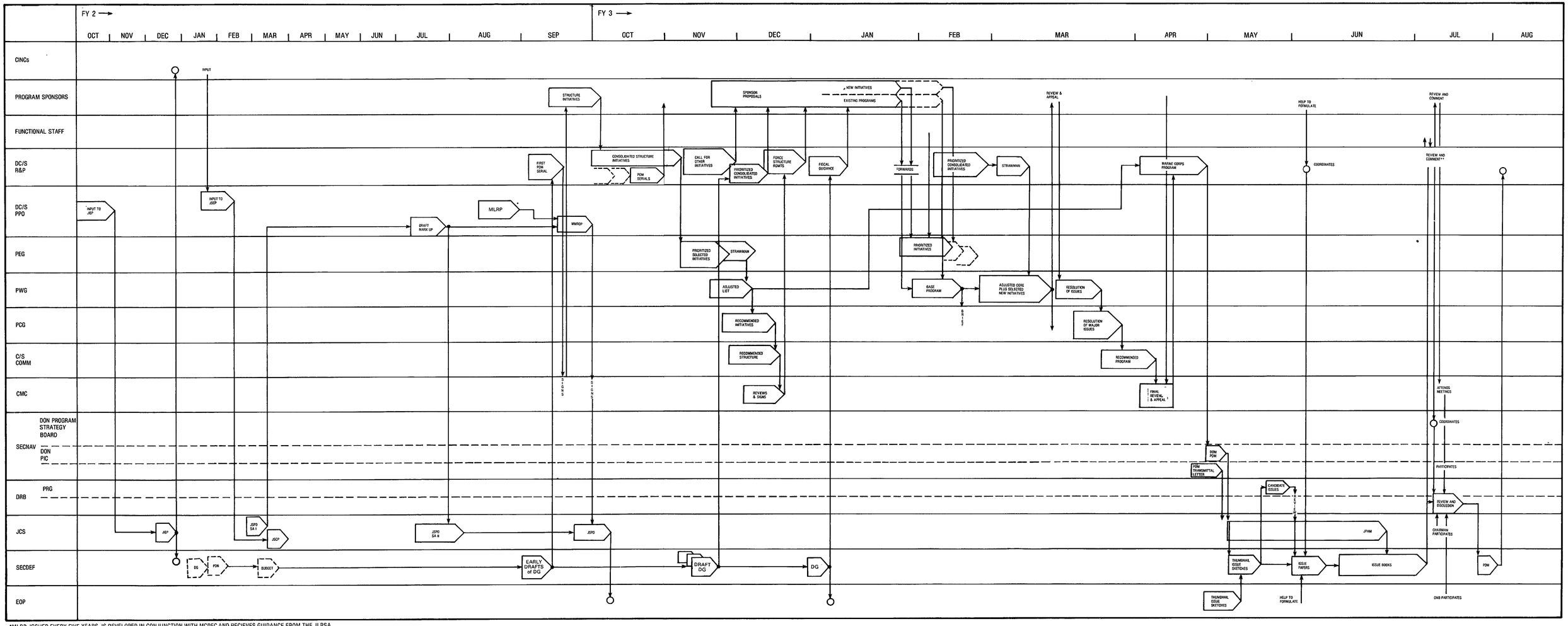

*MLRP, ISSUED EVERY FIVE YEARS, IS DEVELOPED IN CONJUNCTION WITH MCDEC AND RECIEVES GUIDANCE FROM THE JLRSA
**COORDINATED BY DON PIC INTO JOINT DON COMMENTS

APPENDIX III: ABBREVIATIONS AND ACRONYMS

ACSI	--Assistant Chief of Staff, Intelligence (Army)
AF	--Air Force
AFHQ	--Air Force Headquarters
AFSEC	--Secretary of the Air Force
AG	--Army Guidance
ALA	--Army Logistics Assessment
AMP	--Army Material Plan
ARSTAF	--Army Staff
ASA	--Army Strategic Appraisal
ASA(ILFM)	--Assistant Secretary of the Army for Installations, Logistics and Financial Management
ASD(C)	--Assistant Secretary of Defense, Comptroller
BA	--Budget Authority
BAD	--Budget Authority Document
BES	--Budget Estimate Submission
BRB	--Budget Review Board (Air Force)
BTAA	--Baseline Task Area Appraisal (Navy)
CAA	--Concepts Analysis Agency (Army)
CC	--Cost Center (DOD)
CEB	--CNO Executive Board (Navy)
CINC	--Commander in Chief (DOD)
CMC	--Commandant of the Marine Corps
CNO	--Chief of Naval Operations
COA	--Comptroller of the Army
COB	--Command Operating Budget (Army)
COE	--Corps of Engineers (Army)
CPAM	--CNO's Program Analysis Memorandum (Navy)
CPFG	--CNO Program and Fiscal Guidance (Navy)
CPPG	--CNO's Policy and Programming Guidance (Navy)
CRA or CR	--Continuing Resolution Authority
C/S	--Chief of Staff (DOD)
CSAF	--Chief of Staff, Air Force
C/S COMM	--Chief of Staff's Committee (Marine Corps)
DA	--Department of the Army
DAB	--Director of Army Budget

DAF	--Department of the Air Force
DARCOM	--U.S. Army Material Development and Readiness Command
DASD(P/B)	--Deputy Assistant Secretary of Defense, Program/Budget (OSD)
DCNO	--Deputy Chief of Naval Operations
DC/S	--Deputy Chief of Staff (DOD)
DC/SLOG	--Deputy Chief of Staff for Logistics (Army)
DC/S PPO	--Deputy Chief of Staff for Plans, Policy and Operations (Marine Corps)
DC/SOPS	--Deputy Chief of Staff for Operations (Army)
DC/SPER	--Deputy Chief of Staff for Personnel (Army)
DC/SRDA	--Deputy Chief of Staff for Research, Development and Acquisition (Army)
DC/S R&P	--Deputy Chief of Staff, Requirements and Programs (Marine Corps)
DEPSECDEF	--Deputy Secretary of Defense (DOD)
DG	--Defense Guidance (DOD)
DIA	--Defense Intelligence Agency
DOD	--Department of Defense
DOMA	--Director of Operations & Maintenance, Army
DON	--Department of the Navy
DON PIC	--DON Program Information Center (Navy)
DON POM	--DON Program Objective Memorandum (Navy and Marine Corps)
DRB	--Defense Resources Board
DUSD(P)	--Deputy Under Secretary of Defense, Policy (DOD)
EOB	--Expense Operating Budget (DOD)
EOE	--Element of Expense (Air Force)
EOP	--Executive Office of the President
EPA	--Extended Planning Annex (DOD)
FD	--Fiscal Division (Marine Corps)
FFP	--Force and Financial Plan (Air Force)
FMB	--Financial Management Board (Air Force)
FMD	--Fiscal Management Division (Navy)
FP	--Financial Plan (Air Force)
FWG	--Financial Working Group (Air Force)
FYDP	--Five Year Defense Plan (DOD)
GAO	--U.S. General Accounting Office
HQ	--Headquarters
IDA	--Institute for Defense Analyses
IPSP	--Intelligence Priorities for Strategic Planning (JCS)

JCS	--Joint Chiefs of Staff (DOD)
JIEP	--Joint Intelligence Estimate for Planning (JCS)
JLRSA	--Joint Long-Range Strategic Appraisal (JCS)
JPAM	--Joint Program Assessment Memorandum (JCS)
JSCP	--Joint Strategic Capabilities Plan (JCS)
JSPD	--Joint Strategic Planning Document (JCS)
JSPDSA	--Joint Strategic Planning Document--Supporting Analysis (JCS)
JSPS	--Joint Strategic Planning System (JCS)
MAA	--Mission Area Analysis (Air Force)
MACOM	--Major Command (Army)
MAGTF	--Marine Air/Ground Task Force
MAJCOM	--Major Command (Air Force)
MC	--Marine Corps
MCDEC	--Marine Corps Development and Education Command
MCSF	--Marine Corps Stock Fund
MFP	--Major Force Program (DOD)
MILCON	--Military Construction (DOD)
MILPERS	--Military Personnel (DOD)
MLRP	--Marine Corps Long-Range Plan
MMI	--Modernization and Management Initiatives (Navy)
MMROP	--Marine Corps Mid-Range Objectives Plan
MPMC	--Military Personnel, Marine Corps
MRA&L	--Manpower, Reserve Affairs, and Logistics (OSD)
MRIS	--Modernization Resource Information Submissions (Army)
NAVCOMPT	--Navy Comptroller's Office
NIC	--National Intelligence Community
NSC	--National Security Council (EOP)
OBA	--Operating Budget Authority
OBAD	--Operating Budget Authority Document (Air Force)
OBR	--Office of Budget Reports (Navy)
OBRC	--Operating Budget Review Committee (Air Force)
O&M	--Operations and Maintenance (DOD)
ODAB	--Office of the Director of Army Budget
OMB	--Office of Management and Budget (EOP)
O&MMC	--Operations and Maintenance, Marine Corps
O&MMCR	--Operations and Maintenance, Marine Corps Reserve
OMNIBUS	--U.S. Army Operation Readiness Analysis

OP-009	--Director of Naval Intelligence (Navy)
OP-01	--DCNO for Manpower, Personnel & Training (Navy)
OP-02	--DCNO for Submarine Warfare (Navy)
OP-03	--DCNO for Surface Warfare (Navy)
OP-04	--DCNO for Logistics (Navy)
OP-05	--DCNO for Air Warfare (Navy)
OP-06	--DCNO for Plans, Policy, and Operations (Navy)
OP-090	--Director, Navy Program Planning (Navy)
OP-091	--Director, Program Resource Appraisal Division (Navy)
OP-093	--Surgeon General (Navy)
OP-094	--Director, Command and Control (Navy)
OP-095	--Director, Office of Naval Warfare (Navy)
OP-098	--Director, Office of Research, Development, Test, and Evaluation (Navy)
OP-09B	--Director, Naval Administration/Deputy VCNO
OP-09R	--Director of Naval Reserves
OP-90	--General Planning and Programming Division (Navy)
OP-92	--Fiscal Management Division (Navy)
OPNAV	--Office of the Chief of Naval Operations (Navy)
OPTAR	--Operating Target (Navy)
OSA	--Office of Systems Analysis (DOD)
OSD	--Office of the Secretary of Defense (DOD)
PA&E	--Program Analysis and Evaluation (DOD)
PAED	--Director of Program Analysis and Evaluation (Army)
PARR	--Program Analysis and Resource Review (Army)
PBC	--Program and Budget Committee (Army)
PBD	--Program Budget Decision (DOD)
PBG	--Program and Budget Guidance (Army)
PCG	--POM Coordinating Group (Marine Corps)
PDIP	--Program Development Increment Package (Army)
PDM	--Program Decision Memorandum (DOD)
PDP	--Program Decision Package (Air Force)
PDRC	--Program Development Review Committee (Navy)
PE	--Program Element (DOD)
PEDS	--Program Evaluation Decision Summary (Navy)
PEG	--Program Evaluation Group (Marine Corps)
PEM	--Program Element Monitor (OSD)

PGM	--Planning Guidance Memorandum (Air Force)
PIPD	--Planning Input for Program Development (Air Force)
PMC	--Procurement, Marine Corps
POM	--Program Objective Memorandum (DOD)
PPBERS	--Program Performance and Budget Execution Review System (Army)
PPI	--POM Preparation Instructions (DOD)
PRA	--Paperwork Reduction Act
PRC	--Program Review Committee (Air Force)
PRG	--Program Review Group (DOD)
PWG	--POM Working Group (Marine Corps)
RC	--Resource Center (Air Force)
RMR	--Resource Management Reviews (Army)
RPMC	--Reserve Personnel, Marine Corps
SA	--Secretary of the Army
SAR	--Selected Acquisition Report (DOD)
SECDEF	--Secretary of Defense
SECAF	--Secretary of the Air Force
SECNAV	--Secretary of the Navy
SELCOM	--Select Committee (Army)
SFCP	--Strategic Force Capabilities Plan (Air Force)
SPP	--Sponsor Program Proposal (Navy)
TAA	--Total Army Analysis
TOA	--Total Obligational Authority (DOD)
USA	--Under Secretary of the Army
USAAA	--U.S. Army Audit Agency
USAF	--U.S. Air Force
USAFAC	--U.S. Army Finance and Accounting Center
USD(P)	--Under Secretary of Defense, Policy (OSD)
V/CS	--Vice Chief of Staff (JCS)
VCNO	--Vice Chief of Naval Operations
ZBB	--Zero Based Budgeting

APPENDIX IV: SELECTED BIBLIOGRAPHY

BACKGROUND AND HISTORY

Anger, T. E. "Some Critical Thoughts on Defense Resource Planning and the Role of Analysis" Memorandum. Center for Naval Analyses Institute for Naval Studies, January 28, 1974.

Cox, Alden L. "A Comparison of the Systems Concept of Planning, Programming and Budgeting In and Out of Government" Army War College, 1970.
A comparison of applications of systems oriented approaches to budget development in the private and government sectors.

Dawson, John E. "PPBS: Yesterday, Today and Tomorrow" Armed Forces Comptroller (Summer, 1972): 15-23.
A brief introduction to the origins of PPBS and some views on current problems.

Donvito, P.A. "The Essentials of a Planning, Programming, Budgeting System" The Rand Corporation, 1969.
Views of a Rand researcher on the major elements of a PPB system.

Hitch, Charles J. Decision Making for Defense University of California Press, Berkley, CA: 1965.
A discussion of the problems, successes, and rationale for instituting PPBS in the Defense Department by one of the key players in the process.

Korb, Lawrence, J. "The Budget Process in the Department of Defense, 1947 to 1977: The Strengths and Weaknesses of Three Systems" Public Administration Review 37 (July/August 1977): 334-346.
A concise review of the budget process both before and after the installation of PPBS in the Defense Department, including the varying management styles of three Secretaries of Defense.

Schick, Allen. "The Road to PPB: The Stages of Budget Reform" Public Administration Review 26 (December 1966): 243-258.

U.S. Congress. Joint Economic Committee. "The Analysis and Evaluation of Public Expenditures, the PPB System" Volume 1, 2, 3. Washington, DC: Government Printing Office, 1968.
Hearings on PPBS under McNamara.

U.S. Congress. Senate Committee on Government Operations. "Planning, Programming, Budgeting." Inquiry by the Senate Subcommittee on National Security and International Operations, 1970.

U.S. General Accounting Office. Federal Budget Concepts and Procedures Can Be Further Strengthened PAD-80-31. General Accounting Office, 1980.
A summarization of all GAO budget process and concepts reports and recommendations from 1974 through 1981.

West, Michael. U.S. Congress. House Committee on Armed Services. "Comprehensive Authorization: Problems and Prospects."
Unpublished paper by staff member of House Committee on Armed Services summarizing the growth in and rationale for the authorization of increasing portions of DOD's budget, including some problems that have occurred in the process.

White, Kenneth H. "PPBS and Policy Analysis: Are They Really Incompatible?" Army War College, 1972.
An examination of some of the problems in relating policy formulation to the PPBS in DOD.

GENERAL STUDIES AND DESCRIPTIONS OF PPBS

Baird, Bruce C. "Rearming America: The Revolution in Systems Acquisition Management Under the Reagan Administration" Briefing for Air Command and Staff College, 1982.
A critical review of the 32 Carlucci initiatives on acquisition by a long-time defense consultant.

Borsting, Jack, R. "Decision-Making At The Top." Management Science 28 (April 1982): 341-351.
The author, Assistant Secretary of Defense (Comptroller) at the time this article was written, describes the decisionmaking environment at DOD and reviews and comments on the history of PPBS and on recent changes.

Carlucci, Frank. "Management of the DOD Planning, Programming and Budgeting System" Memorandum. March 27, 1981.
Memorandum from the former Deputy Secretary of Defense, Frank Carlucci, directing changes in PPBS. Based on the study done by Vince Puritano.

Carlucci, Frank. "Memorandum on Improving the Budget Process" April 30, 1981.
Decision memorandum produced by the March 1981 Carlucci study of acquisition systems.

Carlucci, Frank. "The Planning Phase of the DOD PPBS" Memorandum. June 12, 1981.

Proceedings of Conference on the Defense Planning, Programming, and Budgeting System: Past, Present and Future 1982.
Proceedings of a conference on PPBS with descriptions of the PPBS processes of each of the four services as of November 1982, critiques of PPBS, both past and present, by former and current high-level participants in the system, and proposals for change by consultants and others working on improving the process.

Lamm, David. V. "The DSARC and PPBS Decision-making Process Within DOD." Thesis, Naval Postgraduate School, 1979.
Explores some apparent conflicts between the DOD acquisition process (DSARC) and its resource allocation system (PPBS).

Mallion, Richard; Moses, George; and Smith, Mary. "Refocusing the PPBS" Resources Management Journal (Fall 1981).
A review of Deputy Secretary of Defense Carlucci's changes and the prospects for the future.

Moeller, William G. "Affordability for Major System Acquisition" Logistics Management Insitutes 1980.
Considers the problems of relating affordability in the acquisition process to overall resource allocation in PPBS.

Novick, David, ed., Program Budgeting--Program Analysis and the Federal Budget" The Rand Corporation, 1964.
The primer on PPBS concepts and applications by the people who invented them.

Puritano, Vince. Final Draft Report of the PPBS Review. Office of the Secretary of Defense, 1981.
The DOD study that formed the basis for the Carlucci (former Deputy Secretary of Defense) initiatives on PPBS in the Carlucci memorandum of March 27, 1981.

Puritano, Vince and Korb, Lawrence. "Streamlining PPBS to Better Manage National Defense" Public Administration Review 42 (Sep/Oct 1981): 569-74.
The former Executive Assistant to the Deputy Secretary of Defense, and now DOD Comptroller, and the current Assistant Secretary for Manpower, Reserve Affairs, and Logistics briefly describe the reason for, and the substance of, the Carlucci initiatives on PPBS of May 27, 1981.

Quade, E.S. and Boucher, W.S. "Systems Analysis and Policy Planning: Applications in Defense" The Rand Corporation, 1968.
A detailed treatment of quantitative methods applicable to program analysis in the Department of Defense.

Rice, Donald B. Defense Resource Management Study: Final Report The RAND Corporation, 1979.
Final report and recommendations of a Defense appointed study group headed by Donald Rice of The Rand Corporation. The Defense Resources Board was created as a result of this study. The group also looked at health affairs and logistics as well as PPBS.

"Steering Group Report on Improving the Defense Acquisition System and Reducing the System Cost" 1981.
DOD study that resulted in the 32 "Carlucci initiatives" on acquisition, as found in the former Deputy Secretary of Defense's memorandum of April 30, 1981.

U.S. Congress. House Committee on Armed Services, Special panel on Defense Procurement Procedures. "Review of the DOD PPBS" July 30, 1981.
A brief review of PPBS as it functioned in DOD in 1981.

U.S. Department of Defense. "The Planning, Programming, and Budgeting System" Instruction 7045.7 (as periodically revised).
The instruction that officially codifies PPBS for DOD.

SERVICE SPECIFIC STUDIES

OSD, JCS

Jones, David C. "Why the Joint Chiefs of Staff Must Change" Defense (Winter 1982): 4-13.
An argument by the former Chairman of the Joint Chiefs of Staff for increasing the independence and analytical capability of the Joint Chiefs of Staff, particularly the resources available to the Chairman.

Meyer, Edward C. "The JCS--How Much Reform Is Needed?" Armed Forces Journal International (April 1982): 82-90.
A different perspective on change in the Joint Chiefs by the current Chief of Staff of the Army.

U.S. Congress, House Committee on Armed Services, "Reorganization proposals for the Joint Chiefs of Staff" Hearings before the Investigations Subcommittee, 97th Cong., 2d sess., 1982.
Hearings on proposals for change in the Joint Chiefs of Staff with testimony by both current and former members of the Joint Chiefs, among others.

"What's Wrong With Our Defense Establishment?" New York Times, November 7, 1982, sec. 6.
An expansion of General Jones' case for change in the Joint Chiefs of Staff, but also focusing on problems in the Department as a whole.

Navy

Department of the Navy Office of the Comptroller. Budget Guidance Manual Navcomp. Instr. 7102.2. April 1983.

Hibbs, N.J. "Bibliography on NARM Development" Working paper. Center for Naval Analyses Institute for Naval Studies, March 1, 1973.

May, Ernest R. "Historical Perspective in Long-Range Planning in the Navy" NRAC80-6. Naval Research Advisory Committee, 1980.
Internal Navy study of Navy long-range planning and recommendations for improvement.

McGlue, P.A. "Navy Resource Model (NARM)" Bibliography. Center for Naval Analyses Institute for Naval Studies, 1981.

Office of Naval Research. "Financial Accounting and Reporting Improvement Concepts" ONR-NR367008. Arthur Anderson & Co., 1980.
A study of Navy financial accounting system with recommendations for major changes.

U.S. Navy Budget Authorization and Acquisition Process Study 2 vols. Navy Advisory Group, 1981.
A lengthy study of the Navy authorization and acquisition process with recommendations for change.

Air Force

Air Force Systems Command. "Affordable Acquisition Approach" Briefing to Secretary of the Air Force and Air Force Chief of Staff. 1982.
Briefing for Chief of Staff of Air Force and Secretary of Air Force by special study group (including retired Air Force officers) under Air Force Systems Command on reasons for growth in acquisition costs and suggestions for change. A key recommendation was to drop marginal programs to maintain economical production rates on programs of higher priority.

Department of the Air Force. "PPBS, A Primer" 3rd ed., Directorate of Programs and Evaluation, 1981.
A succinct description of the basic elements of PPBS in the Air Force.

The Exercise Improvement Team. "Improving the Air Force Planning, Programming, and Budgeting System Exercise Process" 1982.
A report by the team that devised recommendations to streamline the Air Force's exercise program.

Army

Allen, Wayne. "Towards PPBS II: Mission Budgeting--Notions on Improving the Management of Resources" Director of Cost Analysis, Office of the Comptroller of the Army. 1981.

Arthur Young & Co. A Study to Examine the U.S. Army's Accounting System, Final Report" (1979).

Department of the Army. PPBES Handbook 1982.

DOD PLANNING STUDIES

Collins, John M. U.S. Defense Planning: A Critique Westview Press, 1982.
Extensive study by former officer and respected defense analyst of U.S. defense planning. The study notes in particular the adverse effects that turnover among top military and civilian personnel in DOD has on national defense planning.

Jordon, Amos A. and Taylor, William. American National Security: Policy and Process John Hopkins University Press, 1981.
A broad overview and critique of national security policymaking in the U.S.

Schultis, William and Kanter, Hershel. "The Relationship of Military Posture to National Policy" IDA P-1588. Institute for Defense Analyses, 1981.
Comprehensive study of the relationship of military posture to national security policy, and the relationship of national security planning to PPBS.

U.S. General Accounting Office. Models, Data, and War: A Critique of the Foundation for Defense Analysis PAD-80-21. General Accounting Office, 1980.
A critical look at the models and data used in defense analysis.